11333 N. Cedarburg Road
Mequon, WI 53092
Phone: 262-236-2904
Fax: 262-242-9655

www.ci.mequon.wi.us

Department of Community Development
Taped and Televised

PLANNING COMMISSION
Regular Meeting
Wednesday, January 11, 2017
7:00 PM
Christine Nuernberg Hall

Agenda

1) Call to Order, Roll Call

a) Approval of Minutes

b) PLANNING COMMISSION MEETING MINUTES

2) Public Hearing

1) **Michael Best & Friedrich LLP, for Outpost Natural Foods Cooperative.** The applicant requested the item be removed from the agenda. It will be added to the next available meeting.

3) Regular Business

a) **WE Energies.** The applicant is seeking specimen tree removal approval to remove 16 trees for the above listed properties for the installation of a high pressure gas main.

b) **CelluSite, LLC.** The applicant is seeking building and site plan approval for a cell tower located at 6131 W. Chapel Hill Road.

c) **Mallary & Zimmerman for Forward Denta**l. The applicant is seeking exceptions to the Town Center Window Area Obstructions per section 58-301(1)(2)(c) for the property located at 6048 W. Mequon Road (Forward Dental).

d) **Dermond Property Investments.** The applicant is seeking specimen tree removal approval to remove 13 trees to allow for a 3-story, 33 unit multiple family residential development located at 11130 N. Buntrock Avenue.

4) Announcements

5) Adjourn

Dated: January 6, 2017 /s/ Dan Abendroth, Chairman

Notice is hereby given that a quorum of other governmental bodies may be present at this meeting to present, discuss and/or gather information about a subject over which they have decision-making responsibility, although they will not take formal action thereto at this meeting.

Persons with disabilities requiring accommodations for attendance at this meeting should contact the City Clerk's Office at 262-236-2914, twenty-four (24) hours in advance of the meeting.

Any questions regarding this agenda may be directed to the Department of Community Development's Office at 262-236-2904, Monday through Friday, 8:00 AM – 4:30 PM

11333 N. Cedarburg Rd
Mequon, WI 53092-1930
Phone: 262-236-2902
Fax: 262-242-9655

www.ci.mequon.wi.us **Office of Community Development**

TO: **Planning Commission**

FROM: **JAC ZADER, ASSISTANT DIRECTOR COMMUNITY DEVELOPMENT**

DATE: **January 11, 2017**

SUBJECT: **PLANNING COMMISSION MEETING MINUTES**

Memorandum

Attached please find the City of Mequon Planning Commission Meeting Minutes of December 5, 2016 and December 16, 2016 for your review.

Attachments:
Minutes (PDF)

City of Mequon

11333 N. Cedarburg Road
Mequon, WI 53092
Phone: 262-236-2904
Fax: 262-242-9655

www.ci.mequon.wi.us

Department of Community Development
Taped and Televised

PLANNING COMMISSION
Regular Meeting
Monday, December 5, 2016
7:00 PM
Christine Nuernberg Hall

Minutes

1) Call to Order, Roll Call

Present:
Chairman Dan Abendroth
Alderman Robert Strzelczyk
Commissioner Martin Choren
Commissioner Brian Parrish
Alternate Commissioner John Stoker
Commissioner James Schaefer
Commissioner Rebecca Schaefer
Commissioner Rick Lemke

b) Approval of Minutes from November 14, 2016

RESULT:	**APPROVED BY VOICE CALL VOTE [UNANIMOUS]**
MOVER:	Rebecca Schaefer, Commissioner
SECONDER:	James Schaefer, Commissioner
AYES:	Abendroth, Strzelczyk, Choren, Parrish, Stoker, J. Schaefer, R. Schaefer, Lemke
ABSENT:	Mason
EXCUSED:	Adams

2) Public Hearing/Consent

a) Conditional Use Grant. The applicant, Slaby Two LLC for Burn Boot Camp, is seeking conditional use grant approval to operate a fitness center for the property located at 10954 N. Port Washington Road (The Pavilions).

Commissioner Stoker made a motion to go into public hearing.
Ald. Strzelczyk seconded the motion.
A voice vote was called; vote passed (8-0)

Attachment: Minutes (2072 : Planning Commission Minutes from December 5, 2016 and December 16, 2016)

Ald. Strzelczyk made a motion to close public hearing.
Commissioner Stoker seconded the motion.
A voice vote was called; voted passed (8-0)

Ald. Strzelczyk made a motion to approve the item.
Commissioner Jim Schaefer seconded the motion.
A voice vote was called; vote passed (8-0)

RESULT:	**APPROVED [UNANIMOUS]**
MOVER:	James Schaefer, Rebecca Schaefer
AYES:	Abendroth, Strzelczyk, Choren, Parrish, Stoker, J. Schaefer, R. Schaefer, Lemke
ABSENT:	Mason
EXCUSED:	Adams

3) Public Hearing

a) Conditional Use Grant, Building and Site Plan, Certified Survey Map, Fill Permit and Specimen Tree Removal. The applicant, Shaffer Development, is seeking conditional use grant approval to exceed 2 1/2 stories in height for a mixed use project located at 6200 and 6300 W. Mequon Road and 11300-11350 N. Buntrock Avenue.

Ald. Strzelczyk made a motion to go into public hearing.
Commissioner Stoker seconded the motion.
A voice vote was called; vote passed (8-0)

Stan Smith - 10755 N. Oxford Court supports this project. He was on the Mequon Town Center committee for Phase I and he is excited that it is complete and part of the community. He feels that the Shaffer Development is consistent with the vision of the Town Center and urges the Planning Commission to continue to move this project forward. He feels a lot was learned from Phase I about the parking needs, accommodating handicapped people and feels that the city should not micromanage the process. He recommends setting high quality standards and trusting the developer.

Commissioner Stoker made a motion to close the public hearing.
Ald. Strzelczyk seconded the motion.
A voice vote was called; vote passed (8-0)

Asst. Dir. Zader stated that this item was before the Planning Commission (PC) at the November meeting. At that time there were differing opinions on several items. He wanted to revisit the process of how the applicant got to the present situation. He explained that there were originally 6 proposals from the RFP. Three proposals were eliminated from the selection process and the remaining three were presented to the Common Council (CC). The Shaffer Development proposal ultimately was selected. He stated that the current plans have strayed from the original concept and proposed expectations.

Attachment: Minutes (2072 : Planning Commission Minutes from December 5, 2016 and December 16, 2016)

The original proposed site plan presentation by the applicant used phrases such as: "Create a historic sense of place" and "bring together the community through shared community space and outdoor activity space". Shaffer Development was chosen because of the many traditional neighborhood amenities which were highly regarded by the staff and CC. Although some changes from the concept plan were expected, staff feels that the plan is straying away from what was originally expected for this site. Some of the reasons the proposal was selected:

- Interior roadways with walk ups to the buildings that invited people in were shown.
- There was a trail at the north end of the property from Buntrock Road to the railroad crossing.
- Amenities that were proposed that were important to the goals of the Town Center:
    - Outdoor performance space
    - Fromm nature center
    - Community Gardens
    - Nature trail
    - Plaza for entertainment

These spaces were meant to bring people to the residential portion of the property not just the commercial.

Once the concept plan was completed there were items that were desired by staff and the CC as part of the TC goals and initiatives:

- Sidewalk along Buntrock Road
- The trail was still shown; although it was shifted and went around the pond

Asst. Dir. Zader showed renderings of concept plans of buildings A and C. There were entry doors, walk ups to each unit and stairways down to the inner urban trail. Staff was supportive of how inviting it felt between the buildings and the public spaces.

Commissioner Choren asked if the density (the sq. ft and parking) is close to the original proposal.

Asst. Dir. Zader answered that the PUD has a requirement regarding the number of units, so that is set in stone. The parking was determined, by both the PC and CC at the time it was presented, that there was too much parking. The applicant added a TBD building which will require the PUD to be amended. The parking counts will be closer to what the code requires, depending on what uses go into the TBD buildings. He explained that Phase I of the Town Center included the city hall parking as part of their calculations. The big problem with Phase I was that the number of stalls needed for the restaurant was well understated. The developer stated the maximum peak use for the restaurant was 115 parking spaces but based on their capacity and staff, the actual number is about 150-160 spaces.

There are only a few changes from the plans submitted at the meeting in November. The applicant did move the TBD building back towards the north and they moved the bike path back north to where staff requested it to be located; so that it is segregated from the parking lot area. There are a few conditions added in the staff report in case the PC wants to continue moving the project forward. In regards to the TBD buildings, staff feels that the building to

Attachment: Minutes (2072 : Planning Commission Minutes from December 5, 2016 and December 16, 2016)

the east should be built first. Staff feels that the best location for this building is up in the front. Regarding the conditional use grant (CUG), there was a shadow line study done that showed that a 2 ½ story (42 ft. in height) building would have the same shadow impact as the buildings they are proposing, so there would be no negative harm to the neighboring properties or public. Staff is supportive of the CUG.

There was a lengthy conversation last month regarding the specimen trees. The applicant amended their plan to request that only 4 specimen trees be removed. There was a very quick turnaround between last month's meeting and this month with the holiday in between, and staff did not yet receive all the updated information from the applicant regarding the number of specimen trees to be removed.

There have been some slight modifications to the buildings but there are still a number of requirements listed in the report that need to be met. They have added some brick but the updated calculations have not yet been done.

Staff is supportive of the individual walk ups especially between buildings C and B, on the other side of B and on building A. The landscaping plan did not catch up with the grading plan or building plan so there are some significant differences between the two plans. Staff has asked the applicant to bring their plan back in front of the PC so that they can better understand how the landscaping works with the buildings as well as the grading. Most concerning is the difference in grade between buildings B and C where in some areas there is a 3-4 foot difference in grading between the sidewalk and the first floor elevation.

Staff is not in favor of recommending an approval of the project at this time due to the inconsistencies and too many unknowns. Staff did provide a number of conditions that should be taken into consideration if the PC wants to move the project forward and these items should be made part of any approval.

The applicant, Cindy Shaffer was present along with Deborah C. Tomczyk; Reinhart Berner Van Deuren, s.c., Mark Ernst; Principle Engberg Anderson, Aaron Koch; PE Pinnacle Engineering Group, David Hoff; The Hoff Group.

Ms. Shaffer stated that at the last PC meeting there were many details discussed. They meet with city staff the Wednesday after the November PC meeting with their landscape architect and they submitted all the requested documents and reports on that Friday. They are under the assumption that everything requested was submitted and the only inconsistency is the specimen tree removal that was not yet submitted.

Mr. Ernst stated that more brick has been added as well as more masonry was added to the gables on the backsides of the buildings and detailing along the garages. They are at 50% brick between all the buildings. There are many mixed materials that have been used. There is depth in the façade with the projecting bays and the window masonry will be set back; which is an item that shows the quality of the project. He believes the exterior faced is highly articulated.

Attachment: Minutes (2072 : Planning Commission Minutes from December 5, 2016 and December 16, 2016)

He stated that they also enhanced the architectural features in the entryways. They have added glass and trellis features. They have provided walkups where they could, based on grade. There are 27 units with walk ups. There are not walk ups on the north side of the buildings due to topography or facing the railroad tracks. They feel that the triple sliding glass doors used are more practical than a swinging door.

Ms. Shaffer stated that they have reduced the number of apartment units from 155 to 146 and there are 10 townhome units. They increased the number of 2 and 3 bedroom units.

Mayor Abendroth stated that an issue is that the packet information is from November 16th and the renderings shown are from December 5th. There has not been a grading plan submitted or elevations that match that plan. He asked if there are any issues that are of concern regarding the 28 recommendations from staff.

Mr. Koch stated that there are many grading challenges with this site; there is a 28 foot drop that occurs on the site. Each building needs to be at a different level. The grading plans have not completely caught up to the landscape plan; this is the reason for the inconsistency. The grading plan in the packet is what the applicant is working with.

Their strategy is to keep all the buildings level to the sidewalk in the north-south direction. They have added some retaining walls on the southern edge to negotiate the grade change. They made a conscious decision not to provide entrances on the southern sides of the buildings.

Commissioner Lemke asked for an explanation of the grading change in the road between buildings B & C.

Mr. Koch stated that there will be small retaining walls at the southern endcaps of the buildings because of the grade changes. There will be retaining walls on the side of the ramps as you enter the underground parking. There will be a dual sidewalk on the north side of building C.

There will be no walkups on 3 of the units on the east side of both buildings C and B and on the north side of buildings A & B.

Asst. Dir. Zader stated that this is an area of concern with understanding the relationships between the grading and the buildings with the renderings that are shown. The plans do not show what the applicants are describing. The elevations are not matching up with the different plan sets and he feels that it is difficult to make decisions without exact plans.

Ms. Tomczyk, stated that they are appreciative of the time and effort that the staff has put into this project. They feel that it is important to keep this process moving forward and that things will continue to change as the process progresses. She suggests going through the conditions and to continue to work through possible solutions and address open items. She feels that they have provided a very detailed and mostly complete package.

Attachment: Minutes (2072 : Planning Commission Minutes from December 5, 2016 and December 16, 2016)

Asst. Dir. Zader stated that this is final building and site plan approval; it is not concept plan approval. He feels that there are still a number of unresolved issues. He feels that the plans are not as uniform and complete as the applicant states. He stated that staff does not feel confident in recommending approval at this time.

Commissioner Jim Schaefer stated that he does not feel that he can make an intelligent decision without more concrete plans on paper and he does not understand the grading plan.

Ms. Shaffer stated that she needs to move forward with this approval and this process. She is not willing to invest $100,000 that is needed for the continued environmental studies without this approval. She talked through the staff report conditions that she does not agree with or that have been addressed. She feels that they have addressed all the conditions.

Mayor Abendroth asked the applicant about accepting the 28 conditions in order to continue to move through the process. He offered that these conditions can be modified or removed going forward, but discouraged the applicant from going through each condition at this meeting.

Ms. Shaffer stated her appreciation for the cooperation in continuing to move forward and the staff for working through these issues.

Ald. Strzleczyk stated that he struggles with this decision. He wants the project to move forward but he wants to ensure that city's risks are mitigated. He requests that if this is on January's agenda that a bulleted list of conditions be sent to the PC to review before the meeting. He is comfortable approving the item with all the conditions included. He feels that the CC may want to see more amenities. He feels that the buildings are very upscale and of excellent quality. He really likes the materials used and he feels that are a great, natural blend to the area.

Mayor Abendroth made a motion to approve based on all 28 staff requirements being accepted by the applicant.

Ald. Strzleczyk seconded the motion.

Commissioner Rebecca Schaefer stated the she does not like the impression that the applicant can come back and just not meet conditions that they do not want to meet. She would like to slow down this process and she feels that it is going too fast. She feels like the PC is being pressured due to the applicants time frame of doing due diligence.

Ms. Shaffer answered that it is not their intent to pressure the PC. They have been meeting with staff weekly for over a year and there are many details involved. They are focused on getting the best return on the investment for the city and the public.

Commissioner Parrish stated that he is comfortable with the motion made by the Mayor. He feels that it does need to move forward and that the conditions protect the city and PC going forward.

Attachment: Minutes (2072 : Planning Commission Minutes from December 5, 2016 and December 16, 2016)

Roll vote was called; vote passed 7-1 (No: Jim Schaefer)

RESULT:	**APPROVED WITH CONDITIONS [7 TO 1]**
MOVER:	Dan Abendroth, Chairman
SECONDER:	Robert Strzelczyk, Alderman
AYES:	Abendroth, Strzelczyk, Choren, Parrish, Stoker, R. Schaefer, Lemke
NAYS:	J. Schaefer
ABSENT:	Mason
EXCUSED:	Adams

4) Regular Business

a) Conditional Use Grant. The applicant, Rick O'Malley for Trees for Less, is seeking conditional use grant approval to operate a landscape contractor business located at 11550 N. Wasaukee Road.

Ald. Strzleczyk made a motion to go into public hearing.
Commissioner rebecca Schaefer seconded the motion.

Peter O'Malley - 11710 W. Mequon Rd. is opposed to this item. He is the closest neighbor to the Trees for Less property. He stated that the Trees for Less business has grown and there is a lot of commotion with semi-trucks coming off Mequon Rd. The applicant has offered to provide screening to deal with the noise. He feels that they have not had enough time to review the screening or the enforcement of the noise being offered by the applicant.

Matt O'Malley - owns the property north of Trees for Less. He opposes the CUG approval. He believes that Trees for Less does not meet the definition of a landscape contractor business and they should not be approved. He feels that the actual on site uses versus the uses stated in the approval request are not in unison. He stated that there are many additional buildings on the site that did not have permits prior to being built. He stated that as a family they tried to work this out. He said that staff has a very good understanding of the issues on site but that city enforcement has had to visit the property several times, which he feels is a waste of the taxpayers' money. He stated that this site is not the appropriate place for this type of business.

Ald. Strzleczyk made a motion to close public hearing.
Commissioner Rebecca Schaefer seconded the motion.
Voice vote called; vote passed (8-0)

Asst. Dir. Zader stated that the applicant is requesting a CUG to operate a landscape contractor business at 11550 N. Wasaukee Road. There have been some compliance issues on site. The site has operated as a nursery since 1972. Nurseries are permitted in the Agricultural Overlay zoning district; so this is a permitted use. Staff has outlined the permitted uses that are allowed there under a landscape contractor use, what things are prohibited and what things would be allowed under a temporary use (for example; Christmas

Attachment: Minutes (2072 : Planning Commission Minutes from December 5, 2016 and December 16, 2016)

tree sales). The code enforcement officer was at the site in the summer of 2016 and a letter was generated in September with a number of issues that needed to be resolved in a given time frame, which prompted the applicant to apply for a CUG. There are a number of items on the site, regardless of the PC action today, that still need to be corrected from a compliance statement:

- The cabin on Wasaukee Rd is in violation of the setback; it was not approved by the city.
- There is a hoop house that is not in compliance with the 30 foot setback that was not approved by the city.
- The storage bins do not meet the 30 feet set back; and they were not approved by the city.
- There is a fuel storage tank that needs approval.

Staff believes the code does not allow for any retail sales on site. A nursery is a place where trees are grown and either sold via wholesale or a retail shop at another location. A nursery does not allow retail sales or for bringing in plants from other locations to sell.

Regarding the landscape contractor business; there are items that were mentioned that do not fit the definition. The only narrative submitted by the applicant that does meet the definition of a landscape contractor business is being allowed to sell mulch to individuals and deliver it and install it at their premises. There are not any other businesses in the city that engage in the retails sale of mulch or in the wholesale distribution of much. Staff recommends a narrowly defined definition of a landscape contractor business where residents could go to the site (or call), order mulch and have it delivered. It would not be permitted to have any on-site pick up of mulch, no sales of mulch to other landscapers or suppliers for delivery and for usage. There is nothing in the zoning code that defines this so staff is using best practices and is basing this recommendation on what has been done with other developments in the city. There are a few landscape contractor businesses in the city and when they were granted approval they did not ask for sales as part of their approvals.

In order to achieve this approval there are a number of items that staff is requesting:

- All the compliance issues must be addressed.
- If the applicant goes forward with the mulch landscape contractor sales, they must be relocated and comply with setback off the property lines.
- The hoop house and other buildings on site must all meet city setback approvals.
- Aesthetic treatment and buffering is to be provided for neighboring properties to help mitigate the impact of onsite uses (landscaping trees, berms).
- A condition was placed on the 8 a.m. -5 p.m. hours that applies to *all* operations on site.

Staff does recommend approval of the landscape contractor business CUG with the narrowly defined conditions in the staff report.

The applicant, Rick O'Malley was joined by his lawyer Marvin Bynum II. Mr. Bynum thanked staff for all the work they put into working through this application. The applicant has been working to get the property in compliance and to address the neighbors' concerns.

In response to the list of conditions from staff, he responded:

- #1 - The applicant intends to move the mulch storage area away from the property lines.
- #2 – They are happy to comply with this item.
- #3 – They are happy to comply with the business hours suggested.
- #5 – They are working towards righting the compliance issues. They will continue to work with staff.
- #4 - They would like to work with staff to find a middle ground. The mulch operations are important to the applicant's business. It is a seasonal business but it is substantial enough to have a detrimental impact to the applicant if not allowed.

Mr. Rick O'Malley stated there is a long family history on this site and he has been involved in the nursery business for 40+ years. He stated that the entire business is a seasonal business. He stated that April and May are active months for mulch. They do many deliveries but it is mostly in April and May and then it is sporadic throughout the rest of the summer. The mulch is an adjunct to the nursery business. The Christmas tree business is a great seasonal business. He wants to keep his business moving forward. He has offered to work with Peter O'Malley to build a berm and plant trees to provide a buffer between the properties.

Asst. Dir. Zader stated that zoning code has been in place for many years and tree nurseries were always located in the rural areas. It was not intended to be a retail type business. There needs to be a distinction made about what constitutes a retail business, a nursery and what constitutes a landscape contractor business. Staff is trying to limit the number of trips to the site because it is located in a rural area. A non-retail business would have fewer visits to the site but there will always be some traffic to any type of business. There is some concern about distribution and semi-trucks coming and going bringing mulch chips.

He instructed the PC to decide on the definition of what a landscape contractor business constitutes. He reminded the PC that this will apply to other landscape contractor businesses in town and that any area in the R-1 has the ability to ask for a CUG for this type of use.

Commissioner Parrish thanked the neighbors for their insight. He stated that he likes the solution presented by the staff. His concern is that historically this has been happening without any reported issues. He also asked the applicant about the volume of truck traffic.

Mr. Rick O'Malley answered that the truck traffic is mostly during the month of May. He stated that he will adhere to the newly recommneded hours of 8 a.m.-5 p.m. and he is committed to building a berm to buffer the noise for the neighbor to the south. He also added the tree business and mulch business go hand in hand and it is an integral part of the nursery business. He said that many people prefer to come to the site to view the mulch.

<u>George and Danielle Mladenov - 11500 Wasaukee.</u> They support this item. Their driveway runs parallel with the driveway that goes into Trees for Less. They see all of the traffic that enters the Trees for Less site. They stated that if anyone would have a problem with the traffic or noise it would be them and they do not have a problem with any of the traffic or

Attachment: Minutes (2072 : Planning Commission Minutes from December 5, 2016 and December 16, 2016)

noise. They stated that nothing from next door is a nuisance to them. They said the property is well-groomed and they enjoy the families visiting the site to buy Christmas trees.

Mr. Peter O'Malley stated that the Mladenov's experience is different because they are not located near where any of the noise or activity takes place. His first option would be for the operations to move closer to the front of the property. The berm is a secondary option and he is not certain how much it will reduce the noise.

Mr. Matt O'Malley stated that his property has incurred a 20% decrease in value due to activity at Trees for Less.

Commissioner Choren stated that he understands the importance of the mulch business but he also is concerned about the issues the neighbors are complaining about. He suggested that the applicant move the mulch business elsewhere on site to help alleviate the impact to the neighbors.

Mr. Rick O'Malley stated that most of the traffic is residents coming to look at the mulch and also deliveries of mulch. He stated that 90% of the business is delivering mulch to a property. He stated that it is a benefit to his nursery business.

Commissioner Stoker made motion to approve per staff recommendations, excluding item #4 (would allow for retail sales, but exclude wholesale sales).
Commissioner Parrish seconded the motion.

Ald. Strzleczyk stated that he has done business with Rick O'Malley and has had a very good experience. He is supportive of the retail sales. He feels that the issue is the wholesale distribution of mulch, which Mr. Rick O'Malley stated they do not provide. Ald. Strzleczyk stated that the Trees for Less website promotes mulch wholesale distribution; which causes a conflict. He feels that manufacturing of the mulch is taking place at the site. He would like that operation to be moved closer to Wasaukee Road with an increased setback required. He supports the local business but he also feels that the neighbors deserve the feel of a rural living experience without the noise of semi-trucks. He wants to make sure this is an enforceable issue. He feels that the mulch business is an all summer long business, not just two months in the spring. He wants to be supportive but he believes the heavy use of the semi-trucks will continue and that is the complaint that the neighbors have.

Ald. Strzelczyk made a motion to table the issue based on further discovery. He would like the neighbors' issues to be addressed. He stated that he would like to include that no semi-truck deliveries be allowed or limited to a certain number of times a year and in certain months. He does not feel that the wholesale distribution of mulch should be allowed on this site; as it is zoned residential. He does support a heavier retail business there.

Commissioner Stoker disagreed with Ald. Strzelczyk's motion. He stated that he had looked into purchasing lots #8, #9, and #10 in Ashbury Woods and he has spent many hours there. He did not purchase there due to noise from Mequon Rd, but there was never any noise from the applicant's site. He does not feel it is the responsibility of the PC to regulate how many

Attachment: Minutes (2072 : Planning Commission Minutes from December 5, 2016 and December 16, 2016)

loads of mulch this property receives.

Commissioner Choren seconded the motion to table the item.
Roll call was called; Motion failed (5-3; No votes: Mayor Abendroth, R.Schaefer, Parrish, Stoker, Lemke).

Ald. Strzelczyk made a friendly amendment to Commissioner Stoker's motion for this item for the applicant to come back to establish setback and that a site plan presented be to PC.
Commissioner Stoker did not accept the friendly amendment.
Commissioner Jim Schaefer seconded that motion.

Roll call was called; Motion passed, (5-3; No votes: Parrish, Stoker, Lemke)

Roll call was called regarding Commissioner Stoker's motion (to approve excluding #4) including the amendment that the site plan comes back for PC review.
Motion passes (5-3; No Votes: Ald. Strzleczyk, J. Schaefer, Choren).

The CUG was approved and the site plan will come back for PC review.

RESULT:	**APPROVED WITH CONDITIONS [6 TO 3]**
MOVER:	Brian Parrish, Commissioner
SECONDER:	John Mason, Commissioner
AYES:	Abendroth, Mason, Parrish, Stoker, R. Schaefer, Lemke
NAYS:	Strzelczyk, Choren, J. Schaefer
EXCUSED:	Adams

b) Building and Site Plan Amendment. The applicant, CelluSite, LLC, is seeking building and site plan approval for a cell tower located at 6131 W. Chapel Hill.

Asst. Dir. Zader stated that this is a request for a cell tower on Chapel Hill Road. He reminded the PC that recent changes made to the state law make it very difficult for the city to deny a cell tower request if it meets conditions within the statue. The tower is shown at 190 feet tall with a 5 foot lighting rod which puts it at 195 feet, under the 200 foot statutory requirement that would allow the city to take action. He showed a plan of where the tower and enclosure would be located on the site. The enclosure does not currently meet the required offset and the city has the authority to require that it is met. The enclosure shows a chain link fence with barbed wire for the enclosure. All previous enclosures the city has required a masonry or brick type structure with landscaping around it.

Asst. Dir. Zader asked the City Attorney to provide a memo of his legal opinion and that has not yet been received. The City Attorney has commented in previous discussions that the city is unable to stop these facilities as long as the conditions of the statue are met. Staff does recommend approval. He added that the PC could ask for more information from the City Attorney but there is a 90 day time line that if there is not any action taken, it is automatically approved.

Attachment: Minutes (2072 : Planning Commission Minutes from December 5, 2016 and December 16, 2016)

Jeff Wolf, representing Crossroads Church at 6031 W. Chapel Hill Road. He is opposed to this as the church is located 25 feet from the property line where the tower would be located. They are concerned with this being located in a residential neighborhood. He feels that there are more appropriate sites nearby that have towers that could be used (MATC). They are worried about financial concerns as they feel it will discourage both new members as well as the manse is located right next to the tower. They are worried about their inference with their sound systems that are in place.

Susan and Robert Pachner - 6233 W. Chapel Hill Road. They are opposed to this as they live a few hundred feet from this site. They moved here 4 months ago into this beautiful neighborhood which they feel now has caused their home to be significantly decreased in value because of the tower. This is a financial concern for them. He investigated and learned that the tower at MATC has space. He feels that this is for a commercial property and not a residential one. They are very upset by this as are many of their neighbors.

Dennis Hockerman - 6024 W. Chapel Hill Road. He lives directly across the street from Crossroads Church. They have lived there for over 40 years. He does not feel this is fair for one person to be able to decide to negatively affect the neighborhood.

David Schigoda - 443 S. Cottrell Drive, Saukville, WI. He is opposed but does not wish to speak.

Director Kim Tollefson stated that she received an email this evening from the City Attorney that mirrors what the staff is recommending. She stated that through the building and site plan approval process there is the ability to regulate setbacks and aesthetics but if it is under 200 feet in height there is not any other control that the city has. She reiterated that the City Attorney did send an email but that it was received this evening and did not make it into the board packet.

The applicant, Derek McGrew, representing Parallel Infrastructure and T-Mobile stated that they are using an economic hardship in the state code to build a new tower. Prior to the state code, T-Mobile was for forced to use an existing structure that was not ideal; it did not give them the coverage they needed. For this reason they were held to a rent that was extremely high. In the packet he provided is information about the hardship endured by T-Mobile, the site coverage maps and an affidavit stating that all other structures were looked at and other properties were contacted. He stated that relators feel that cell towers diminish the property values around the tower, but he said that this is not true and he can provide studies that back this. He stated that the towers nearby were not interested in leasing space to them. He stated that there should not be an interference caused by the tower; they are an FCC licensed provider. He stated that insurance does not increase due to the towers. He commented that everyone has multiple devices and they all want coverage that enables their devices to work but they do not want the towers near them that allow this to happen.

Ald. Strzelczyk stated that he feels that the state legislators have let us down. He plans to vote no to this proposal based on principal that he does not agree with it. He feels that it destroys the neighborhood. He feels this does not fit in a platted neighborhood next to a

Attachment: Minutes (2072 : Planning Commission Minutes from December 5, 2016 and December 16, 2016)

church. MATC is down the street and is a much more appropriate location. He said that the Chapel Hill neighborhood is a hidden gem in the city and he is very frustrated by this item being before the PC.

Commissioner Jim Schaefer stated that he agrees with Ald. Strzelczyk; he does not like that this feels like it is shoved down his throat. He also plans to vote no.

Commissioner Rebecca Schaefer stated that she also dislikes the statue. She would like to vote no based on principal but she wants to understand what the repercussions are because she feels uncomfortable putting the city at any risk of a lawsuit.

Asst. Dir. Zader explained that this would go to the Board of Appeals and the applicant would appeal the error of the decision making and the Board of Appeals would most likely overturn the decision. The City Attorney does attend the Board of Appeals meetings and he would most likely provide legal advise them regarding the statue.

Mayor Abendroth stated that the problem with not approving this item is that then there is not control to determine the building and landscaping approvals. He asked if an access road off Highland Road need to be approved.

Dir. of Public Works/City Engineer, Kristen Lundeen, stated that the city is not able to deny the access request.

Commissioner Lemke made a motion to table this item until the letter from the City Attorney is available to be reviewed by the PC.
Ald. Strzelczyk seconded the motion
Roll call was taken, motion passed (7-1, No vote: Stoker)

RESULT:	**TABLED [7 TO 1]**
MOVER:	Rick Lemke, Commissioner
SECONDER:	Robert Strzelczyk, Alderman
AYES:	Abendroth, Strzelczyk, Choren, Parrish, Schaefer, Schaefer, Lemke
NAYS:	Stoker
ABSENT:	Mason
EXCUSED:	Adams, Hawley

c) Preliminary Plat and Development Agreement. The applicant, North Shore Bank for Mequon Preserve Estates, is seeking preliminary plat and development agreement approval for a 77-lot subdivision located at the lands south of 10631 W. Wauwatosa Road.

Asst. Dir. Zader stated that this item is back for preliminary plat approval for the TDR site that was approved previously. When this was originally approved the access point was located to the north. Veridian Homes had a contract on the entire parcel including a 5-acre piece along Wauwatosa Road that provided access at the Hidden Creek intersection. Both staff and the DOT feel is a preferably location. Negotiations between the owner of the land and Veridian ended but Veridian did retain ownership of the 5-acre parcel.

Attachment: Minutes (2072 : Planning Commission Minutes from December 5, 2016 and December 16, 2016)

The first step is to approve the preliminary plat and the development agreement for this project and then to approve the development agreement for item #7's project. The agreement states that whichever party develops first would have to install this road network and any improvements that the DOT would require on Wauwatosa Road. This helps to alleviate an issue with trying to provide a temporary access road there until the property is developed. The city feels that this is a good compromise to get the location in a desired spot.

The preliminary plat is similar to the previously approved plat but there are a few minor tweaks that are noted in the staff report. The plat shows 77 lots using 16 of the 22 TDR available credits. There is a land swap with the McDonald property that will take place.

The development agreement does allow for the 2 model homes to be built for Phase I once the roadway is installed. There are connections to the south that may connect to a future separate development. Staff does recommend approval but both items would need to be approved to move forward.

The applicant, John Kuhn and David Kane from North Shore Bank and David Koch from Pinnacle Engineering were present.

Mayor Abendroth asked the applicant if they had any objections to the 29 conditions in the staff report.

Mr. Kuhn answered they did not have any objections at this time.

Ald, Strzleczyk made a motion to approve the item subject to staff recommendations.
Commissioner Stoker seconded the motion.
A voice vote was taken; vote passed (8-0)

RESULT:	**APPROVED WITH CONDITIONS [UNANIMOUS]**
MOVER:	Robert Strzelczyk, Alderman
SECONDER:	John Stoker, Alternate
AYES:	Abendroth, Strzelczyk, Choren, Parrish, Stoker, Schaefer, Schaefer, Lemke
ABSENT:	Mason
EXCUSED:	Adams, Hawley

d) Final Plat and Development Agreement Amendment. The applicant, Veridian Homes for Lucht Property, is seeking final plat and development agreement amendment approval for a 5-lot subdivision located at 10565 N. Wauwatosa Road.

Asst. Dir. Zader stated that the applicant will dedicate the right of way to the city. In order to accommodate the developer, the development agreement has to be modified to allow the final plat to occur without any improvements. There is a condition that building permits will not be issued until the roadway is complete. The right of way is needed to allow for the preliminary plat to go forward and be approved. There are a few minor changes in the report with regard to the naming of the road and the easement. This is a temporary easement that

Attachment: Minutes (2072 : Planning Commission Minutes from December 5, 2016 and December 16, 2016)

provides legal access to lots #4 and #5. In order to get a plat approved by the state legal access needs to be shown. It is not permanent and it will not remain.

Staff does recommend approval according to the conditions in the staff report. The engineering department did add one condition (#10) that the structure in the right of way is razed prior to the plat being recorded.

The applicant, Matt Cudney representing Veridian Homes, stated that they request condition #9 be removed. He stated that on the original approval on March 10, 2016, the concept plan and the preliminary plat that is was done straight zoning and is not a PUD; additional requirements are allowed.

Asst. Dir. Zader stated that the rest of the area is a PUD and that was made as a condition of the PUD. He does not know if they have full authority to do so, but it was made a condition of the PUD. Staff will not object if it is removed.

Mr. Patrick McDonald, who owns the property on 10631 N. Wauwatosa Road, stated that he sold the property to Veridian Homes and is currently working with John Kuhn on the land swap. He has been working on this since 2006 and he would like to see it get approved. He would really like the Lucht name to remain on the road. His in-law's family was there since 1840's and they are appreciative of the name being used.

Asst. Dir. Zader stated that typically in the past roads have not been allowed to be named after individuals; it is not an ordinance but it has been a policy that has been in place for a number of years but the PC does have the authority if the name is preferred or staff can help decide a name.

Ald. Strzleczyk made a motion to approve the item with item #9 being removed and condition #10 be added and to allow for the Lucht name to be used.
Commissioner Stoker seconded the motion.
Voice vote was called, vote passed (8-0)

RESULT:	**APPROVED [UNANIMOUS]**
MOVER:	Robert Strzelczyk, Alderman
SECONDER:	John Stoker, Alternate
AYES:	Abendroth, Strzelczyk, Choren, Parrish, Stoker, Schaefer, Schaefer, Lemke
ABSENT:	Mason
EXCUSED:	Adams, Hawley

5) Announcements

a) 2017 Planning Commission Meeting Schedule

Asst. Dir. Zader stated that the 2017 meeting calendar was included in the packet.

Attachment: Minutes (2072 : Planning Commission Minutes from December 5, 2016 and December 16, 2016)

He stated that this is the last meeting for Deputy Director James Keegan as he will be leaving to take a new job at WE Energies.
Commissioner Parrish made a motion to adjourn
Ald. Strzleczyk seconded the motion.

Meeting concluded at 10:02 p.m.

RESULT:	**APPROVED [7 TO 0]**
MOVER:	Brian Parrish, Commissioner
SECONDER:	Robert Strzelczyk, Alderman
AYES:	Abendroth, Strzelczyk, Choren, Parrish, Stoker, Schaefer, Lemke
ABSENT:	Mason
EXCUSED:	Adams, Hawley
RECUSED:	Schaefer

6) Adjourn

Attachment: Minutes (2072 : Planning Commission Minutes from December 5, 2016 and December 16, 2016)

City of Mequon

11333 N. Cedarburg Road
Mequon, WI 53092
Phone: 262-236-2904
Fax: 262-242-9655

www.ci.mequon.wi.us

Department of Community Development
Taped and Televised

PLANNING COMMISSION
Regular Meeting
Friday, December 16, 2016
9:00 AM
Christine Nuernberg Hall

Minutes

1) Call to Order, Roll Call

Present:
Chairman Dan Abendroth
Alderman Robert Strzelczyk
Commissioner James Schaefer
Commissioner Rebecca Schaefer
Commissioner Rick Lemke

2) Policy

a) Text Amendment to Chapter 58, Zoning Code, related to the required offset of non-residential structures

Asst. Dir. Zader stated that this is a request from Ald. Wirth. Related to Section 416 in the zoning code; related to building structure location. The new requirement will require a ratio of 1 to 1 building height or structure height to the property line for all non-residential structures adjacent to residential property. Currently, most districts typically have offset of 30 feet, so now if you have a 42 feet high building or structure, the setback would be 42 feet. It will apply to all non-residential structures; not just buildings. This will go to Common Council in January for public hearing and potential action.

Mayor Abendroth made a motion to approve the item.
Ald. Strzelczyk seconded the motion.

Ald. Strzelczyk asked for confirmation that it is either the height of the structure or the city coded setback, whichever is greater.

Asst. Dir. Zader confirmed this.

Commissioner Becky Schaefer asked if this went through the City Attorney and whether it trumps other legislation.

Attachment: Minutes (2072 : Planning Commission Minutes from December 5, 2016 and December 16, 2016)

Asst. Dir. Zader answered that there still could be legal action on certain items but this is the best the city can try and protect residential properties.

Roll call was called; vote passed (5-0)

Ald. Strzelczyk made a motion to adjourn.
Commissioner B. Schaefer seconded the motion.
Voice vote was called; vote passed (5-0)

RESULT:	**APPROVED [4 TO 0]**
AYES:	Abendroth, Strzelczyk, R. Schaefer, Lemke
ABSENT:	Choren, Mason, Parrish, Stoker, J. Schaefer
EXCUSED:	Adams,
RECUSED:	

3) Adjourn

Attachment: Minutes (2072 : Planning Commission Minutes from December 5, 2016 and December 16, 2016)

City of Mequon

11333 N. Cedarburg Rd
Mequon, WI 53092-1930
Phone: 262-236-2902
Fax: 262-242-9655

www.ci.mequon.wi.us **Office of Community Development**

TO: **Planning Commission**

FROM: **JAC ZADER, ASSISTANT DIRECTOR COMMUNITY DEVELOPMENT**

DATE: **January 11, 2017**

SUBJECT: **Michael Best & Friedrich LLP, for Outpost Natural Foods Cooperative. The applicant requested the item be removed from the agenda. It will be added to the next available meeting.**

City of Mequon

11333 N. Cedarburg Rd
Mequon, WI 53092-1930
Phone: 262-236-2902
Fax: 262-242-9655

www.ci.mequon.wi.us

Office of Community Development

TO: **Planning Commission**

FROM: **JAC ZADER, ASSISTANT DIRECTOR COMMUNITY DEVELOPMENT**

DATE: **January 11, 2017**

SUBJECT: **WE Energies. The applicant is seeking specimen tree removal approval to remove 16 trees for the above listed properties for the installation of a high pressure gas main.**

Applicant:	WE Energies
Status of Applicant:	Easement holder
Requested:	Removal of Specimen Trees
Existing Use:	Single Family Home Vacant Land
Existing Zoning:	R – 1 (Rural Residential)
Lot size:	Varies
Location:	9011 W. Wauwatosa Road 10032 N. Wauwatosa Road 10159 N. Wauwatosa Road North of 10031 N. Wauwatosa Road
District:	#4
Tax Key:	#14-033-06-00.00

Background: The applicant is requesting to remove 16 specimen trees identified by City Forester, Mike Gies, on several properties where WE Energies is replacing an underground gas main. The underground gas main location has been approved by the Public Service Commission and has been under construction for since last summer. As the Commissioners may recall, the applicant received approval in May of 2016 to remove specimen trees on an earlier phase of the project.

City Forester Recommendation: Planning staff consulted with City Forester, Mike Gies, to determine whether removal of the tree should be permitted. According to a memo by Mr. Gies, dated November 8, 2016 (see attached), his recommendation is to allow removal of the specimen tree based in accordance with the Tree Preservation policy.

If Planning Commission allows removal then the City Forester recommends **approval** of the specimen tree removal on the following condition(s):

1. The applicant shall provide 189" of replacement trees on the property or in a city park or pay $18,900 to the City of Mequon for urban forestry projects.

Attachments:
packet (PDF)

Attachment: packet (2069 : WE Energies)

ADDENDUM
to
PLANNING COMMISSION APPLICATION

LOCATION OF PROPERTY
9011 W. Donges Bay Road

OWNER
City of Mequon

Mequon, WI 53097

LOCATION OF PROPERTY
South of Donges Bay Road,
West of Wauwatosa Road

OWNER
Wayside Nurseries, Inc.
10032 N. Wauwatosa Road
Mequon, WI 53097

DESCRIPTION OF REQUEST:

Wisconsin Gas LLC, doing business as We Energies, as part of its ongoing replacement of older natural gas infrastructure in our service area, is replacing an existing stretch of pipe in the village of Germantown and city of Mequon. The Public Service Commission of Wisconsin (PSCW) in its final decision dated November 5, 2015, determined that the gas replacement project is in the general public interest and is required by the public convenience and necessity.

We Energies has obtained easements from landowners along the route (easements attached), and we plan to begin clear trees in mid to late January 2017 in preparation of constructing the remainder of the gas lateral in spring 2017. We Energies' Forestry identified 16 trees that may be specimen trees, subject to determining if the trees qualify as specimen trees. We Energies is requesting approval to remove sixteen trees as follows:

9011 W. Donges Bay Rd: 3 White Cedar
Wayside Nursery: 3 Oak, 2 Cherry, 1 Maple, 7 Basswood

To: Mequon Planning Commission

From: Mike Gies, City Forester

Date: November 8, 2016

Subject: WE Gas pipeline project Donges Bay Rd.

Background

The proposed location for the WE Gas pipeline project on Donges Bay Rd. was inspected on December 16, 2016. It was proposed that 16 specimens would be affected and in turn removed as part of the project. The trees vary in diameter with a (24") single stem Red Oak being the largest. (3) Multi-stemmed American Lindens are also proposed for removal; the stems vary in size from (20") to (12").

Analysis

Wisconsin Gas LLC, doing business as WE Energies, as part of its ongoing replacement of older natural gas infrastructure in out service area, is replacing an existing stretch of pipe in the village of Germantown and the city of Mequon. The Public Service Commission of Wisconsin (PSCW) in its final decision dated November 5, 2015, determined that the gas replacement project is in the general public interest and is required by the public convenience and necessity.

The proposal encompasses two different properties. The first property is 9011 W. Donges Bay Road. The inspection of the property was completed and three trees are proposed for removal. The three trees are: (20") Arborvitae, (17") Arborvitae, and (16") Arborvitae, also commonly known as White Cedar. The Cedars are in fair to good condition; there is some interior deadwood that is expected due to the age, size, and shade that is provided by surrounding trees.

The second property affected is south of Donges Bay Road and west of Wauwatosa Road. The property is owned by Wayside Nurseries, Inc.; the trees are on the western most property line. All of the trees are currently growing between a farm field to the west and a tree nursery field to the east. The tree/ fence row is approximately 45' wide, and runs the entire length of the property north to south. The tree line is comprised of mostly boxelder, ash, buckthorn, grapevine, and linden. WE Energies original proposal included removal of 3 Oak, 2 Cherry, 1 Maple, and 7 Basswood. Upon inspection, it was found that the two Cherry and two Linden/ Basswood are in very poor condition with 80-90% of the tree dead. The four trees also had large decay cavities that exceeded 40% of there trunk width, and were over run with grapevine. For these above stated reasons these four trees weren't considered specimen quality trees. The following trees were inspected and considered in good condition: 1- 3 stem American Linden (41"), 1- single stem Bur Oak (14"), 1- single stem Bur Oak (10"), 1- 2 stem American Linden (33"), 1- 5 stem American Linden (80"), 1- single stem American Linden (23"), 1- single stem American Linden (17"), 1- single stem Red Oak (24"), and 1- single stem Sugar Maple (10").

Attachment: packet (2069 : WE Energies)

A special notation should be made. Also included in the affected tree line are five trees of significance that should be noted due to their close proximity to the proposed project. 1- single stem Bur Oak (44"), 1- single stem Hackberry (15"), 1- single stem Red Oak (30"), 1- 2 stem American Linden (30"), and 1- single stem Sugar Maple (14"). A special note and GPS locate was done on these specific trees to ensure they're undisturbed during construction.

Recommendation

The Forestry Department supports the removal of the (16) trees as part of a beneficial community project. The future gas pipeline will allow for growth and fill demand in Mequon and surrounding communities for years to come. Working together with the Regional Forrester for WE Energies, careful consideration was taken in terms of setting up a route that would impact Mequon's urban canopy as minimally as possible.

If the Planning Commission approves the removal of the (16) trees the total DBH would equal (252"). Accordingly, WE Energies would be responsible for replacing 75% of the diameter. This would equal (189") of replacement trees. This would be approximately (63) 3" trees, selected or approved by the forester. In lieu of planting, the owner could donate $18,900.00 to the Mequon Tree Fund, which would be used for Urban Forestry projects. Whether the owner decides to replant or not, the $18,900.00 would be put into a non-lapsing escrow account before a building permit is issued. The money would then be returned after the tree planting is complete.

Thank you,

Mike Gies

Mequon City Forester

Attachment: packet (2069 : WE Energies)

Proposed Removals WE gas line:

Wayside Property: Marked with orange or pink ribbon

1- 3 stem American Linden
   Stem 1 = 12"DBH
   Stem2 = 14"DBH
   Stem3= 15" DBH
   Total = 41"

1- Single stem Bur Oak 14"DBH
1- Single stem Bur Oak 10" DBH
1- 2 stem American Linden
   Stem 1 = 18"DBH
   Stem 2 = 15"DBH
   Total = 33"
1- 5 stem American Linden
   Stem 1 = 20"DBH
   Stem2 = 16"DBH
   Stem3 = 15"DBH
   Stem 4 = 15"DBH
   Stem 5 = 14"DBH
   Total = 80"
1- Single stem American Linden 23"DBH
1- Single stem American Linden 17"DBH
1- Single stem Red Oak 24" DBH
1- Single stem Sugar Maple 10"DBH

Trees of significance/ noted only: Marked with green ribbon

1- Single stem Bur Oak 44"DBH
1- Single stem Hackberry 15"DBH
1- Single stem Red Oak 30"DBH
1- 2 stem American Linden
   Stem 1 = 14"
   Stem2 = 16"
1- Single stem Sugar Maple 14"DBH

Attachment: packet (2069 : WE Energies)

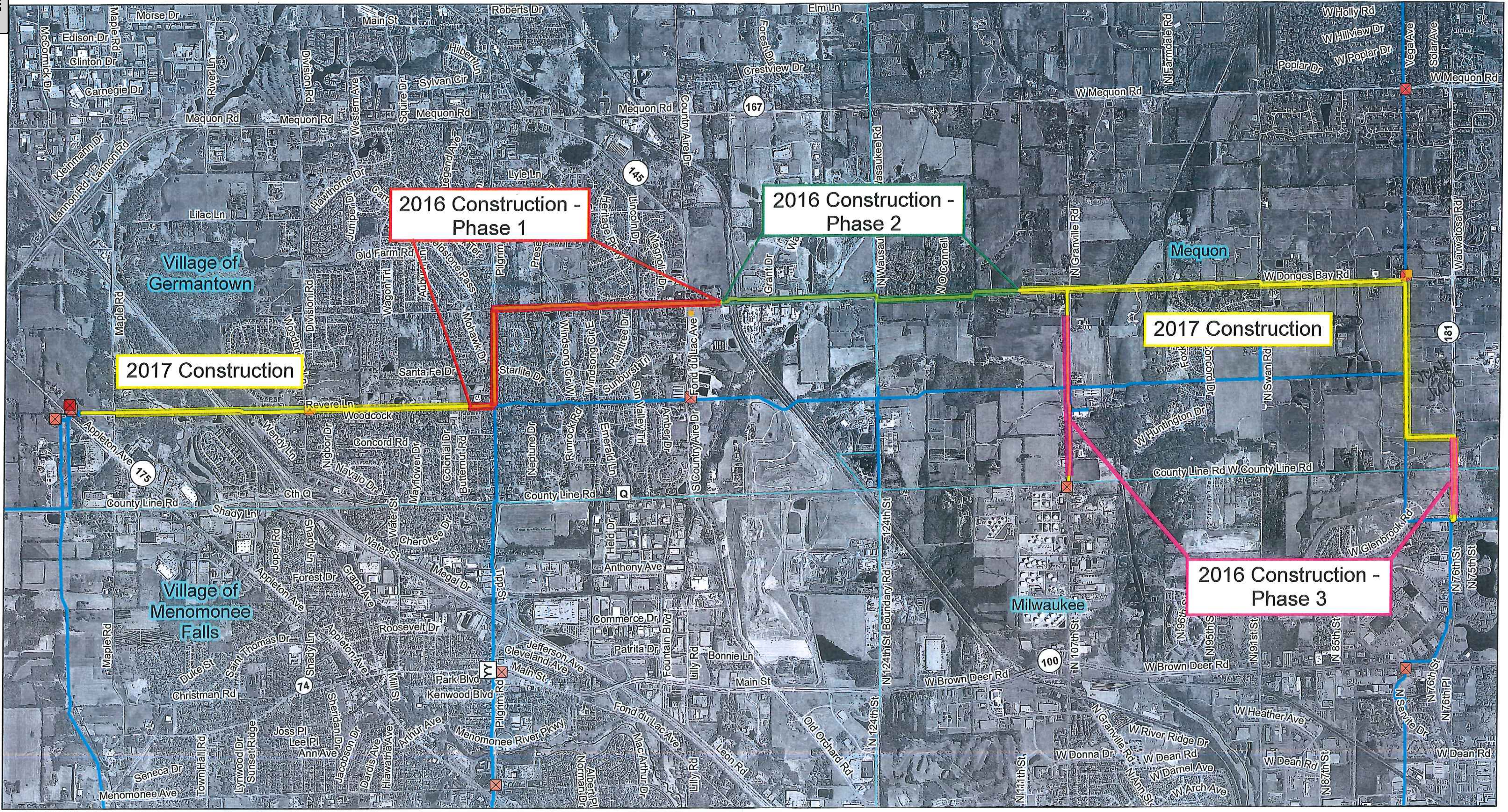

Proposed Route

Existing High Pressure Gas Main

Existing Town Border Station

Existing Regulator Station

New Regulation Station / Reserve Land

Municipal Boundary

Miles
0 0.5 1

N

Germantown - Mequon Main Replacement

Aerial Photograph Overview Map
11/3/2015

Source: WROC Imagery, 2010

WAUWATOSA ROAD (STH 181) 26W
14-033-01-000.01
14-034-06-000.01
HOUSE OF PRAYER LUTHERAN CHURCH
14-039-04-003.00
10.05 AC
6.76 AC
14-039-04-001.00
10.03N
9.95 AC
14-038-04-002.00
14-039-04-003.03
9.79 AC
14-039-04-004.00
1.00 AC
14-038-13-001.00
1.15 AC
33.34 AC
2.2 AC

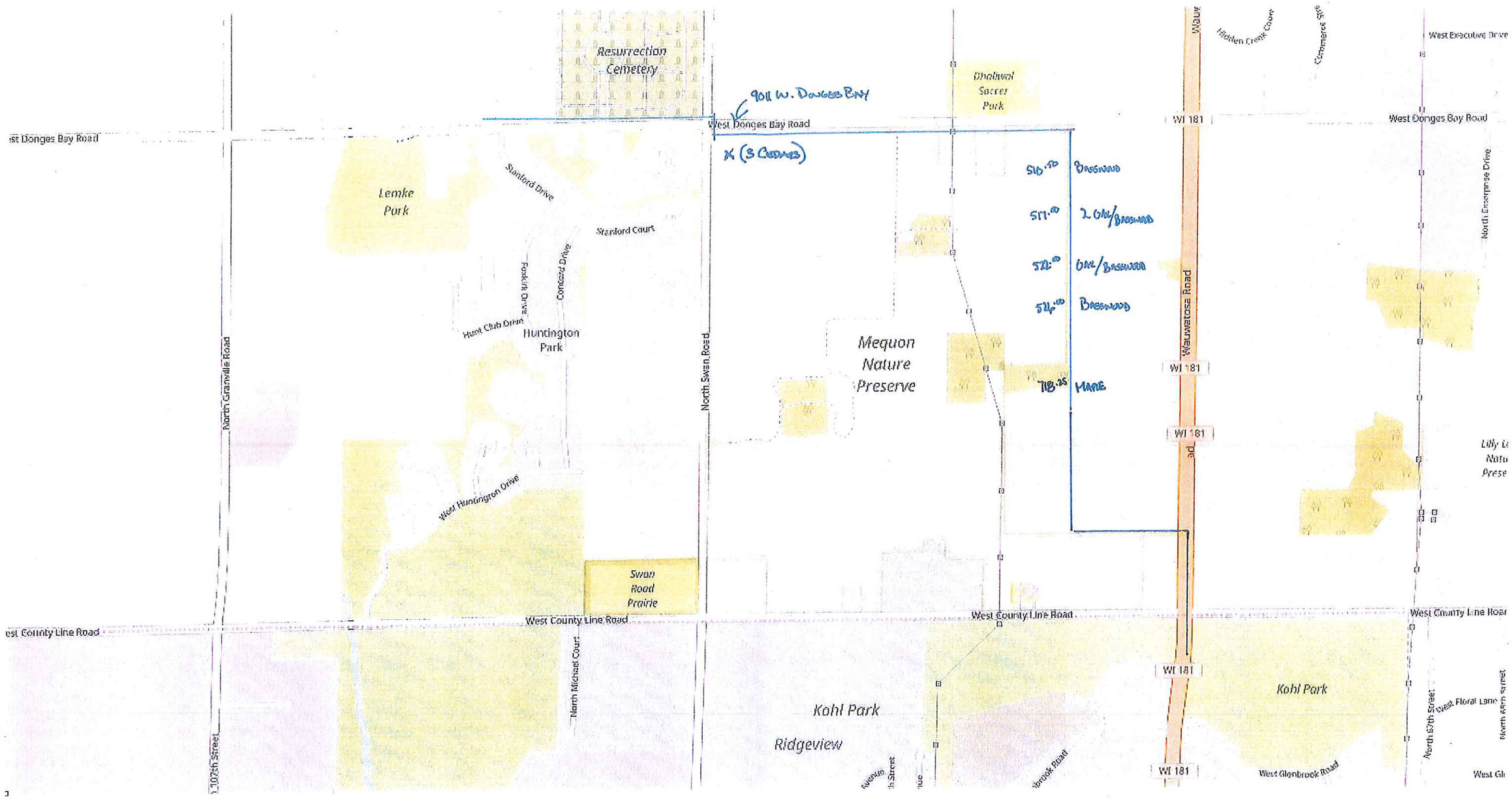
Resurrection Cemetery
9011 W. Donges Bay
West Donges Bay Road
X (3 Cedars)
Bhalwal Soccer Park
WI 181
West Donges Bay Road
Lemke Park
Stanford Drive
Stanford Court
Foskitt Drive
Concord Drive
Heat Club Drive
Huntington Park
North Granville Road
North Swan Road
Mequon Nature Preserve
516.50 Basswood
511.00 2 Oak/Basswood
522.00 Oak/Basswood
524.00 Basswood
718.25 Maple
Waukesha Road
Hidden Creek Court
Commerce Park
West Executive Drive
North Enterprise Drive
West Huntington Drive
Swan Road Prairie
West County Line Road
North Michael Court
Kohl Park
Ridgeview
West Glenbrook Road
North 107th Street
North 87th Street
West Floral Lane

City of Mequon

11333 N. Cedarburg Rd
Mequon, WI 53092-1930
Phone: 262-236-2902
Fax: 262-242-9655

www.ci.mequon.wi.us

Office of Community Development

TO: **Planning Commission**

FROM: **JAC ZADER, ASSISTANT DIRECTOR COMMUNITY DEVELOPMENT**

DATE: **January 11, 2017**

SUBJECT: **CelluSite, LLC. The applicant is seeking building and site plan approval for a cell tower located at 6131 W. Chapel Hill Road.**

Applicant:	Derek McGrew
Status of Applicant:	Agent
Requested:	Building and Site Plan
Existing Use:	Single family
Existing Zoning:	R-2B (Residential 1.5 Acre)
Land Use Plan:	Residential 1 – 1.5 Acre
Location:	6131 W, Chapel Hill Road
District:	#1
Tax Key:	#14-052-01-030.00

Background: The applicant requests building and site plan approval for a telecommunication facility located at 6131 W Chapel Hill Road. T-Mobile is looking to construct a 195 foot cell tower and equipment enclosure on the existing single family parcel. In 2013, the Wisconsin State Legislature approved Act 20 which places strict limits on how municipalities may regulate cell phone towers and renders a majority of the City's Telecommunication Ordinance invalid. In the past, the City of Mequon has required Conditional Use Grant approval for new cell tower installations. The City Attorney has determined that based on the changes made to state law, Conditional Use Grant approval is no longer warranted. The Planning Commission tabled the item at its December 5, 2016 meeting in order to get clarification from the City Attorney.

On a related matter, the Planning Commission met on December 16, 2016 to review proposed Ordinance 2016-1488 which requires any non-residential structure to comply with the zoning district's side offset, or if adjacent to a residentially zoned property, increase the required offset by a ratio of 1:1 based on the height of the structure. The Common Council will take action on the proposed Ordinance on January 10, 2017. If the Ordinance is approved, the proposed cell tower would not meet the offset requirement based on the 1:1 ratio. Since there may be legal questions related to this application, the City Attorney will be in attendance at Wednesday night's meeting.

Building and Site Plan:
The plan shows the tower and equipment enclosure on the southeast side of the existing lot approximately 20 feet from the east property line. The minimum offset for any structure, which includes the enclosure around the equipment, in the R-2B district is 25 feet. The applicant will be required to comply with the 25 foot offset. The 70 foot equipment enclosure area is shown to be surrounded with a six foot tall PVC fence. Despite the new law, the City's Building and Site Plan review process allows staff to require an aesthetically pleasing enclosure and therefore

recommends that the applicant provide an updated plan with the use of brick or stone for the enclosure with landscaping around the entire exterior perimeter of the structure.

Staff Recommendation:
If the Common Council adopts Ordinance 2016-1488 on January 10th, the offset for the tower will not meet the 1:1 requirement and therefore staff will recommend **denial** of the application.

If the Common Council fails to adopt Ordinance 2016-1488, planning staff recommends approval of the building and site plan based on the following conditions:

1. The enclosure around the equipment shall be offset 25 feet from the east property line.
2. The applicant shall submit an updated plan that shows a brick or stone enclosure and surrounding landscaping for staff review and approval.

Attachments:
packet (PDF)

CelluSite, LLC

AC	Arrival Corridor	LTD	Limited Use
A-1	Agricultural Preserve	OA	Agricultural Overlay
A-2	General Agricultural	PUD	Planned Unit Development Overla
B-1	Neighborhood Business	P-1	Park & Recreation
B-2	Community Business	R-1	Single-Family Residential (5 Ac. Min.)
B-3	Office & Service Business	R-1B	Single-Family Residential (2.5 Ac. Min.)
B-4	Business Park	R-2	Single-Family Residential (2.0 Ac. Min.)
B-5	Light Industrial	R-2B	Single-Family Residential (1.5 Ac. Min.)
B-6	Rural Industrial	R-3	Single-Family Residential (1.0 Ac. Min.)
B-7	Rural Business	R-4	Single-Family Residential (3/4 Ac. Min.)
C-1	Shoreland/Wetland Conservancy	R-5	Single-Family Residential (1/2 Ac. Min.)
C-2	General Conservancy	R-6	Single-Family Residential (4 du/Ac)
CGO	Central Growth Overlay	RM	Multi-Family Residential
FFO	Flood Fringe Overlay	TC	Town Center
FW	Floodway	TDR	Transfer of Development Rights
IPS	Institutional & Public Service		

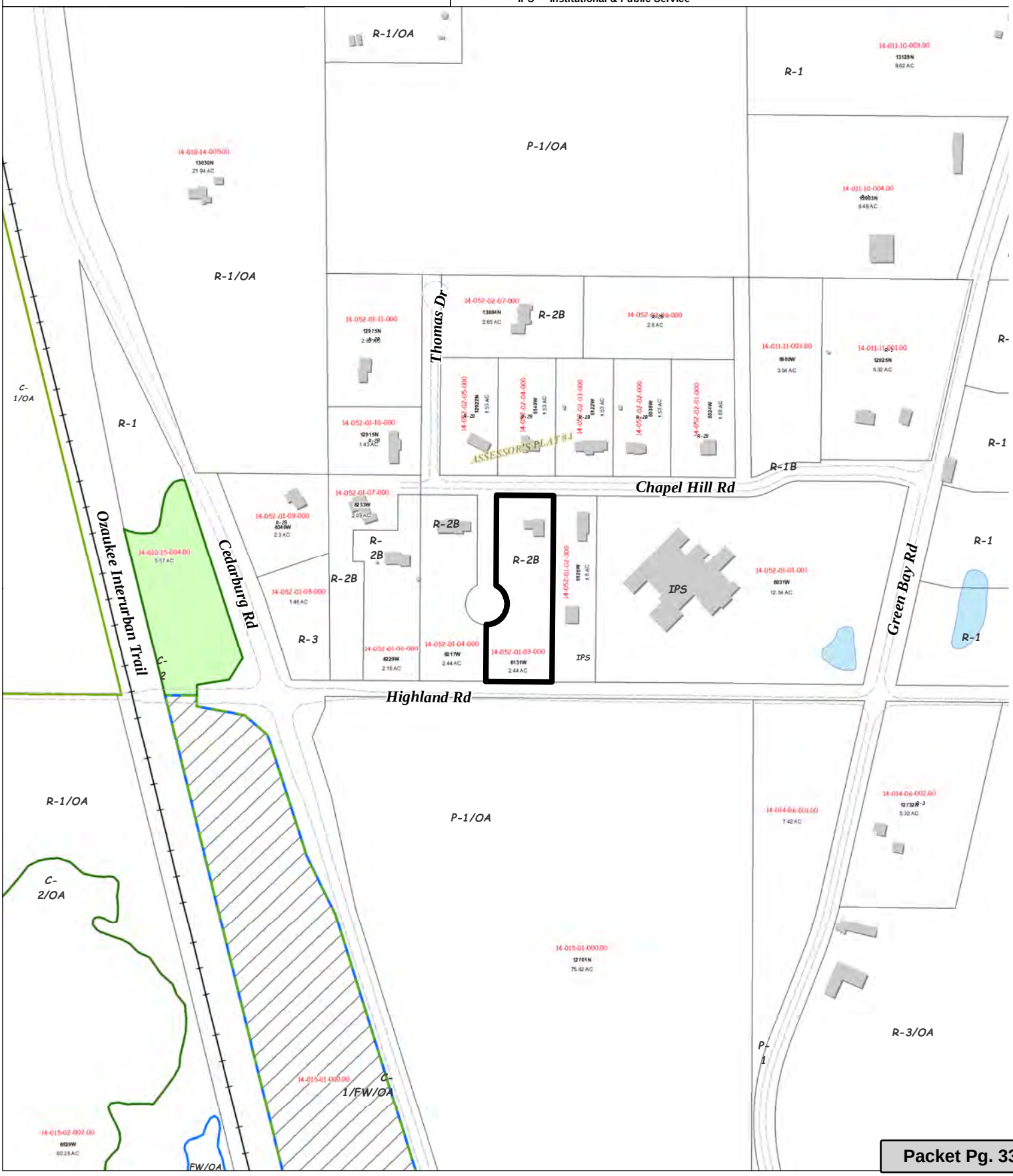

Attachment: packet (2070 : CelluSite, LLC)

CelluSite, LLC

Attachment: packet (2070 : CelluSite, LLC)

Attachment: packet (2070 : CellusSite, LLC)

T-MOBILE REV D REDLINES

SITE ID: ML91104B

DATE: _____

RF ENGINEER: _____ **DATE:** _____ 1) RF CONFIGURATION ATTACHED _____ 2) ANT. RAD CENTER: _____ 3) CABLE SIZE: _____ # OF CABLES: _____ 4) AZIMUTHS: A_____ B_____ C_____ D_____ 5) CABINET TYPE: _____ 6) COMMENT: _____	**FIELD OPS:** _____ **DATE:** _____ 1) SITE ACCESS REVIEWED: _____ 2) ACCESS ROAD REVIEWED: _____ 3) EQUIPMENT LAYOUT: _____ 4) COMMENT: _____	**SITE ACQ:** _____ **DATE:** _____ 1) CONTACT INFO CORRECT _____ 2) LEASE AREA: _____ 3) SITE SET BACKS: _____ 4) TOWER SETBACKS: _____ 5) UTILITY ROUTING: _____ 6) EQUIPMENT LOCALE: _____ 7) COMMENT: _____	**DEC MGR:** _____ **DATE:** _____ 1) COMMENT: _____
POWER: _____ **DATE:** _____ 1) POWER LOCALE: _____ 2) PROVIDER: _____ 3) TYPE: _____ (I.E.) BORE, CORE 4) SPECIAL NEED: _____ 5) COMMENT: _____	**FIBER:** _____ **DATE:** _____ 1) FIBER LOCALE: _____ 2) PROVIDER: _____ FIBER: _____ 3) TYPE: _____ (I.E.) BORE, CORE 4) SPECIAL NEED: _____ 5) COMMENT: _____	**REGULATORY:** _____ **DATE:** _____ 1) LATITUDE: _____ 2) LONGITUDE: _____ 3) STRUCT. AGL: _____ GRD: _____ 4) FOUNDATION: _____ 5) OA AGL: _____ 6) COMMENT: _____	**CM/PM:** _____ **DATE:** _____ 1) LAYOUT: _____ 2) STRUCTURE: _____ RF: _____ 3) INSITE: _____ LEASE: _____ 4) POWER: _____ FIBER: _____ 5) COMMENT: _____

Attachment: packet (2070 : CellUSite, LLC)

Parallel
INFRASTRUCTURE

SITE NAME: CHAPEL HILL RL MONOPINE
T-MOBILE SITE ID: ML91104B
6131 W. CHAPEL HILL ROAD
MEQUON, WI 53097

NOTE:
SITE IS LOCATED WITHIN FEMA FLOOD MAP PANEL 55089C0188F DATED 12/04/07 WITHIN FLOOD ZONE X – AREAS DETERMINED TO BE OUTSIDE THE 500 YR FLOOD PLAIN.

LOCATION MAP

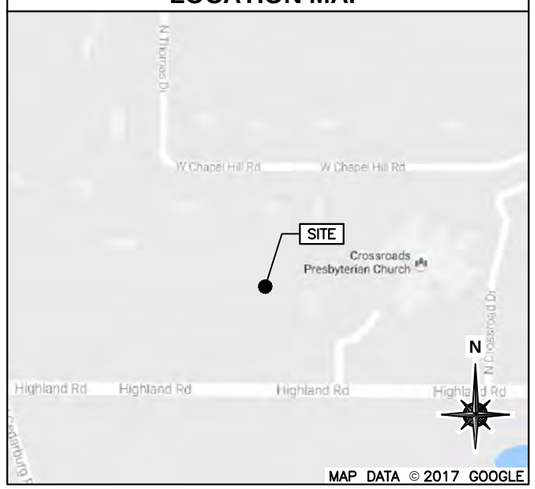

AERIAL MAP

PROJECT DESCRIPTION

NEW 64'–0" X 69'–0" FENCED COMPOUND WITHIN NEW 70'–0" X 70'–0" LEASE AREA AND NEW 190'–0" MONOPOLE. INSTALL T–MOBILE EQUIPMENT IN NEW SHELTER AT GRADE. NO NEW WATER OR SEWER IS REQUIRED AS FACILITY IS UNMANNED.

T-MOBILE BUILD OUT:

(9) NEW ANTENNAS, (7) RRU'S, (1) HCS, (2) COVP'S, (2) EQUIPMENT RACKS, (3) SYSTEM MODULES

PROPERTY SUMMARY

SITE ADDRESS:
6131 W. CHAPEL HILL ROAD
MEQUON, WI 53097
OZAUKEE COUNTY

TAX ID NUMBER:
14–052–01–03–000

ZONING:
R–2B

SITE ELEVATION:
723.3' (AMSL)
1A DATE: 10/03/16

COORDINATES:
LATITUDE: 43° 15' 04.70" N (43.251306°)

LONGITUDE: 87° 59' 10.68" W (–87.9863°)

UTILITIES

ELECTRIC:
WE ENERGIES
CONTACT: TBD
PHONE: (877) 426–6331

FIBER:
AT&T
CONTACT: TBD
PHONE: (855) 637–9527

APPLICABLE CODES

BUILDING CODE:
WI COMMERCIAL BUILDING CODE
(2009 INTERNATIONAL BUILDING CODE W/AMENDMENTS)

ELECTRICAL CODE:
NATIONAL ELECTRICAL CODE 2011

CONTACTS

PROPERTY OWNER:
JEREMY & SARAH WEINRICH
6131 W. CHAPEL HILL ROAD
MEQUON, WI 53097
CONTACT: PROPERTY OWNER
PHONE: (414) 840–3045

APPLICANT:
CELLUSITE, LLC ON BEHALF OF PARALLEL INFRASTRUCTURE
103 WILSHIRE COURT,
NOBLESVILLE, IN 46062
CONTACT: DEREK MCGREW
PHONE: (317) 507–4541
EMAIL: derek@cellusite.net

PROJECT TEAM

A&E:
W–T COMMUNICATION DESIGN GROUP, LLC.
2675 PRATUM AVENUE
HOFFMAN ESTATES, IL 60192
CONTACT: SERGIO CONTRERAS
DIRECT: (224) 293–6411
PHONE: (224) 293–6333
FAX: (224) 293–6444

SITE ACQUISITION:
CELLUSITE, LLC
103 WILSHIRE COURT,
NOBLESVILLE, IN 46062
CONTACT: DEREK MCGREW
PHONE: (317) 507–4541
EMAIL: derek@cellusite.net

SURVEYING:
MERIDIAN SURVEYING, LLC
N8774 FIRELANE 1
MENASHA, WI 54952
PHONE: (920) 993–0881
FAX: (920) 273–6037

APPROVALS

PENDING APPROVAL OF THE JURISDICTION, THE FOLLOWING PARTIES HAVE REVIEWED THE DESIGN WITHIN THEIR FUNCTIONAL RESPONSIBILITIES AND HAVE APPROVED THIS PROJECT FOR CONSTRUCTION. CONTRACTORS MAY NOT START CONSTRUCTION WITHOUT A NOTICE TO PROCEED (NTP).

	PRINT NAME	SIGNATURE	DATE
LANDLORD			
PRECON. MGR			
DEVELOP. MGR			
CONST. INSP.			
A&E MGR.			
RF ENGINEER			
OPERATIONS			
ZONING REP			
UTILITIES			

SHEET INDEX

SHEET NUMBER:	DESCRIPTION:
T–1	TITLE SHEET
T–2	GENERAL NOTES
T–3	GENERAL NOTES
T–4	GENERAL NOTES
LS–1	LAND SURVEY
LS–2	LAND SURVEY
LS–3	LAND SURVEY
C–1	OVERALL SITE PLAN
C–2	COMPOUND PLAN
C–3	ENLARGED SITE PLAN
C–4	GRADING PLAN
C–5	GRADING DETAILS
C–6	ICE BRIDGE, GPS, & SITE DETAILS
C–7	FENCE DETAILS
L–1	LANDSCAPING DETAILS
A–1	TOWER ELEVATION
A–2	ANTENNA PLAN
A–3	EQUIPMENT SPECIFICATIONS
A–4	EQUIPMENT SPECIFICATIONS
A–4.1	EQUIPMENT RACK SPECIFICATIONS
A–4.2	EQUIPMENT RACK SPECIFICATIONS
A–5	RISER DIAGRAM
E–1	UTILITY PLANS
E–2	ENLARGED UTILITY PLAN
E–3	H–FRAME & UTILITY DETAILS
E–4	UTILITY RISER DIAGRAM
G–1	GROUNDING PLANS
G–2	GROUNDING RISER
G–3	GROUNDING DETAILS
G–4	GROUNDING DETAILS
G–5	GROUNDING DETAILS
SG–1	OSHA SIGNAGE
	FOR REFERENCE BY OTHERS
1 OF 6 THROUGH 6 OF 6	SHELTER DRAWINGS
1 OF 1	SLAB FOUNDATION
1 OF 1	REDUNDANT HVAC CONTROL
1 OF 1	EXTERIOR LIGHT INSTALLATION
1 OF 1	STANDARD HOOD MOUNTING
1 OF 2 THROUGH 2 OF 2	STANDARD A/C INSTALLATION

Parallel
INFRASTRUCTURE

T-Mobile
stick together
8550 BRYN MAWR AVENUE,
SUITE 100
CHICAGO, ILLINOIS 60631

CelluSite, LLC

PLANS PREPARED BY:

W-T
W-T COMMUNICATION DESIGN GROUP, LLC.
WIRELESS INFRASTRUCTURE
2675 Pratum Avenue
Hoffman Estates, Illinois 60192
PH: (224) 293-6333 FAX: (224) 293-6444
www.wtengineering.com

COPYRIGHT © 2017 W-T COMMUNICATION DESIGN GROUP, LLC.

A&E LICENSE:

JEFFERY GUTOWSKY
PROFESSIONAL ENGINEER
STATE OF WISCONSIN
LICENSE # 0035509–006
EXPIRES: 07/31/2018 SIGNED: / /

REVISIONS:

DATE	DESCRIPTION	BY	REV
08/01/16	FOR CLIENT REVIEW	ATK	A
10/11/16	REVISIONS	RSM	B
01/03/17	REVISIONS	RSM	C
01/04/17	REVISIONS	RSM	D

SITE INFORMATION:

ML91104B
CHAPEL HILL RL
6131 W. CHAPEL HILL ROAD
MEQUON, WI 53097
OZAUKEE COUNTY

W-T PROJECT NUMBER:
T1601045

SHEET TITLE:
TITLE SHEET

SHEET NUMBER:
T-1

Attachment: packet (2070 : CellusSite, LLC)

GENERAL REQUIREMENTS:

1.1 INTENT

1. THESE SPECIFICATIONS AND CONSTRUCTION DRAWINGS ACCOMPANYING THEM DESCRIBE THE WORK TO BE DONE AND THE MATERIALS TO BE FURNISHED FOR CONSTRUCTION.

2. THE DRAWINGS AND SPECIFICATIONS ARE INTENDED TO BE FULLY EXPLANATORY AND SUPPLEMENTARY. HOWEVER, SHOULD ANYTHING BE SHOWN, INDICATED OR SPECIFIED ON ONE AND NOT THE OTHER, IT SHALL BE DONE THE SAME AS IF SHOWN, INDICATED OR SPECIFIED IN BOTH.

3. THE INTENTION OF THE DOCUMENTS IS TO INCLUDE ALL LABOR AND MATERIALS REASONABLY NECESSARY FOR THE PROPER EXECUTION AND COMPLETION OF THE WORK AS STIPULATED IN THE CONTRACT.

4. THE PURPOSE OF THE SPECIFICATIONS IS TO INTERPRET THE INTENT OF THE DRAWINGS AND TO DESIGNATE THE METHOD OF THE PROCEDURE, TYPE AND QUALITY OF MATERIALS REQUIRED TO COMPLETE THE WORK.

5. MINOR DEVIATIONS FROM THE DESIGN LAYOUT ARE ANTICIPATED AND SHALL BE CONSIDERED AS PART OF THE WORK. NO CHANGES THAT ALTER THE CHARACTER OF THE WORK WILL BE MADE OR PERMITTED BY THE OWNER WITHOUT ISSUING A CHANGE ORDER.

1.2 CONFLICTS

1. THE CONTRACTOR SHALL BE RESPONSIBLE FOR VERIFICATION OF ALL MEASUREMENTS AT THE SITE BEFORE ORDERING ANY MATERIALS OR DOING ANY WORK. NO EXTRA CHARGE OR COMPENSATION SHALL BE ALLOWED DUE TO DIFFERENCE BETWEEN ACTUAL DIMENSIONS AND DIMENSIONS INDICATED ON THE CONSTRUCTION DRAWINGS. ANY SUCH DISCREPANCY IN DIMENSION WHICH MAY BE FOUND SHALL BE SUBMITTED TO THE OWNER FOR CONSIDERATION BEFORE THE CONTRACTOR PROCEEDS WITH THE WORK IN THE AFFECTED AREAS.

2. THE BIDDER, IF AWARDED THE CONTRACT, WILL NOT BE ALLOWED ANY EXTRA COMPENSATION BY REASON OF ANY MATTER OR THING CONCERNING WHICH SUCH BIDDER MIGHT HAVE FULLY INFORMED THEMSELVES PRIOR TO THE BIDDING.

3. NO PLEA OF IGNORANCE OF CONDITIONS THAT EXIST, OR OF DIFFICULTIES OR CONDITIONS THAT MAY BE ENCOUNTERED OR OF ANY OTHER RELEVANT MATTER CONCERNING THE WORK TO BE PERFORMED IN THE EXECUTION OF THE WORK WILL BE ACCEPTED AS AN EXCUSE FOR ANY FAILURE OR OMISSION ON THE PART OF THE CONTRACTOR TO FULFILL EVERY DETAIL OF ALL THE REQUIREMENTS OF THE CONTRACT DOCUMENTS GOVERNING THE WORK.

1.3 CONTRACTS AND WARRANTIES

1. CONTRACTOR IS RESPONSIBLE FOR APPLICATION AND PAYMENT OF CONTRACTOR LICENSES AND BONDS.

1.4 STORAGE

1. ALL MATERIALS MUST BE STORED IN A LEVEL AND DRY FASHION AND IN A MANNER THAT DOES NOT NECESSARILY OBSTRUCT THE FLOW OF OTHER WORK. ANY STORAGE METHOD MUST MEET ALL RECOMMENDATIONS OF THE ASSOCIATED MANUFACTURER.

2. THE BTS MUST BE STORED INSIDE UNTIL THERE IS POWER ON SITE.

1.5 CLEAN UP

1. THE CONTRACTORS SHALL AT ALL TIMES KEEP THE SITE FREE FROM ACCUMULATION OF WASTE MATERIALS OR RUBBISH CAUSED BY THEIR EMPLOYEES AT WORK AND AT THE COMPLETION OF THE WORK, THEY SHALL REMOVE ALL RUBBISH FROM AND ABOUT THE BUILDING AREA, INCLUDING ALL THEIR TOOLS, SCAFFOLDING AND SURPLUS MATERIALS AND SHALL LEAVE THEIR WORK CLEAN AND READY FOR USE.

2. EXTERIOR: VISUALLY INSPECT EXTERIOR SURFACES AND REMOVE ALL TRACES OF SOIL, WASTE MATERIALS, SMUDGES AND OTHER FOREIGN MATTER.

   A. REMOVE ALL TRACES OF SPLASHED MATERIALS FROM ADJACENT SURFACES.

   B. IF NECESSARY TO ACHIEVE A UNIFORM DEGREE OF CLEANLINESS, HOSE DOWN THE EXTERIOR OF THE STRUCTURE.

3. INTERIOR: VISUALLY INSPECT INTERIOR SURFACE AND REMOVE ALL TRACES OF SOIL, WASTE MATERIALS, SMUDGES AND OTHER FOREIGN MATTER FROM WALLS/FLOOR/CEILING.

   A. REMOVE ALL TRACES OF SPLASHED MATERIAL FROM ADJACENT SURFACES.

   B. REMOVE PAINT DROPPINGS, SPOTS, STAINS AND DIRT FROM FINISHED SURFACES.

1.6 CHANGE ORDER PROCEDURE

1. CHANGE ORDERS MAY BE INITIATED BY THE OWNER AND/OR THE CONTRACTOR INVOLVED. THE CONTRACTOR, UPON VERBAL REQUEST FROM THE OWNER SHALL PREPARE A WRITTEN PROPOSAL DESCRIBING THE CHANGE IN WORK OR MATERIALS AND ANY CHANGES IN THE CONTRACT AMOUNT AND PRESENT TO THE OWNER WITHIN 72 HRS FOR APPROVAL. SUBMIT REQUESTS FOR SUBSTITUTIONS IN THE FORM AND IN ACCORDANCE WITH PROCEDURES REQUIRED FOR CHANGE ORDER PROPOSALS. ANY CHANGES IN SCOPE OF WORK OR MATERIALS WHICH ARE PERFORMED BY THE CONTRACTOR WITHOUT A WRITTEN CHANGE ORDER AS DESCRIBED AND APPROVED BY THE OWNER SHALL PLACE FULL RESPONSIBILITY OF THESE ACTIONS ON THE CONTRACTOR.

1.7 RELATED DOCUMENTS AND COORDINATION

1. GENERAL CARPENTRY, ELECTRICAL AND ANTENNA DRAWINGS ARE INTERRELATED. IN PERFORMANCE OF THE WORK, THE CONTRACTOR MUST REFER TO ALL DRAWINGS. ALL COORDINATION TO BE THE RESPONSIBILITY OF THE CONTRACTOR.

1.8 SHOP DRAWINGS

1. CONTRACTOR SHALL SUBMIT SHOP DRAWINGS AS REQUIRED AND LISTED IN THESE SPECIFICATIONS TO THE OWNER FOR APPROVAL.

2. ALL SHOP DRAWINGS SHALL BE REVIEWED, CHECKED AND CORRECTED BY CONTRACTOR PRIOR TO SUBMITTAL TO THE OWNER.

1.9 PRODUCTS AND SUBSTITUTIONS

1. SUBMIT 3 COPIES OF EACH REQUEST FOR SUBSTITUTION. IN EACH REQUEST IDENTIFY THE PRODUCT OR FABRICATION OR INSTALLATION METHOD TO BE REPLACED BY THE SUBSTITUTION. INCLUDE RELATED SPECIFICATION SECTION AND DRAWING NUMBERS AND COMPLETE DOCUMENTATION SHOWING COMPLIANCE WITH THE REQUIREMENTS FOR SUBSTITUTIONS.

2. SUBMIT ALL NECESSARY PRODUCT DATA AND CUT SHEETS WHICH PROPERLY INDICATE AND DESCRIBE THE ITEMS, PRODUCTS AND MATERIALS BEING INSTALLED. THE CONTRACTOR SHALL, IF DEEMED NECESSARY BY THE OWNER SUBMIT ACTUAL SAMPLES TO THE OWNER FOR APPROVAL IN LIEU OF CUT SHEETS.

1.10 QUALITY ASSURANCE

1. ALL WORK SHALL BE IN ACCORDANCE WITH APPLICABLE LOCAL, STATE AND FEDERAL REGULATIONS. THESE SHALL INCLUDE BUT NOT BE LIMITED TO THE LATEST VERSION OF THE COOK COUNTY BUILDING CODE.

1.11 ADMINISTRATION

1. BEFORE THE COMMENCEMENT OF ANY WORK, THE CONTRACTOR WILL ASSIGN A PROJECT MANAGER WHO WILL ACT AS A SINGLE POINT OF CONTACT FOR ALL PERSONNEL INVOLVED IN THIS PROJECT. THIS PROJECT MANAGER WILL DEVELOP A MASTER SCHEDULE FOR THE PROJECT WHICH WILL BE SUBMITTED TO THE OWNER PRIOR TO THE COMMENCEMENT OF ANY WORK.

2. SUBMIT A BAR TYPE PROGRESS CHART NOT MORE THAN 3 DAYS AFTER THE DATE ESTABLISHED FOR COMMENCEMENT OF THE WORK ON THE SCHEDULE, INDICATING A TIME BAR FOR EACH MAJOR CATEGORY OR UNIT OF WORK TO BE PERFORMED AT SITE, PROPERLY SEQUENCED AND COORDINATED WITH OTHER ELEMENTS OF WORK AND SHOWING COMPLETION OF THE WORK SUFFICIENTLY IN ADVANCE OF THE DATE ESTABLISHED FOR SUBSTANTIAL COMPLETION OF THE WORK.

3. PRIOR TO COMMENCING CONSTRUCTION, THE OWNER SHALL SCHEDULE AN ON-SITE MEETING WITH ALL MAJOR PARTIES. THIS WOULD INCLUDE (THOUGH NOT LIMITED TO) THE OWNER, PROJECT MANAGER, CONTRACTOR, LAND OWNER REPRESENTATIVE, LOCAL TELEPHONE COMPANY, TOWER ERECTION FOREMAN (IF SUBCONTRACTED).

4. CONTRACTOR SHALL BE EQUIPPED WITH SOME MEANS OF CONSTANT COMMUNICATIONS, SUCH AS A MOBILE PHONE OR A BEEPER. THIS EQUIPMENT WILL NOT BE SUPPLIED BY THE OWNER, NOR WILL WIRELESS SERVICE BE ARRANGED.

5. DURING CONSTRUCTION, CONTRACTOR MUST ENSURE THAT EMPLOYEES AND SUBCONTRACTORS WEAR HARD HATS AT ALL TIMES. CONTRACTOR WILL COMPLY WITH ALL SAFETY REQUIREMENTS IN THEIR AGREEMENT.

6. PROVIDE WRITTEN DAILY UPDATES ON SITE PROGRESS TO THE OWNER.

7. COMPLETE INVENTORY OF CONSTRUCTION MATERIALS AND EQUIPMENT IS REQUIRED PRIOR TO START OF CONSTRUCTION.

8. NOTIFY THE OWNER / PROJECT MANAGER IN WRITING NO LESS THAN 48 HOURS IN ADVANCE OF CONCRETE POURS, TOWER ERECTIONS, AND EQUIPMENT CABINET PLACEMENTS.

1.12 INSURANCE AND BONDS

1. CONTRACTOR SHALL AT THEIR OWN EXPENSE CARRY AND MAINTAIN FOR THE DURATION OF THE PROJECT ALL INSURANCE AS REQUIRED AND LISTED AND SHALL NOT COMMENCE WITH THEIR WORK UNTIL THEY HAVE PRESENTED AN ORIGINAL CERTIFICATE OF INSURANCE STATING ALL COVERAGES TO THE OWNER. REFER TO THE MASTER AGREEMENT FOR REQUIRED INSURANCE LIMITS.

2. THE OWNER SHALL BE NAMED AS AN ADDITIONAL INSURED ON ALL POLICIES.

3. CONTRACTOR MUST PROVIDE PROOF OF INSURANCE.

TOWER & ANTENNA INSTALLATION:

1.1 WORK INCLUDED

1. IF REQUIRED, ERECT FURNISHED TOWER.

2. GROUND TOWER TEMPORARILY DURING ERECTION. GROUNDING SHALL INCLUDE BASE(S) AND ANCHORS.

3. IF REQUIRED, INSTALL THREE (3) SIDE ARMS, CONSISTING OF THREE (3) 6'-0" AS INDICATED ON DRAWINGS – CONFIRM WITH OWNER REPRESENTATIVE.

4. INSTALL ANTENNAS AS INDICATED ON DRAWINGS AND OWNER SPECIFICATIONS.

5. INSTALL GALVANIZED STEEL ANTENNA MOUNTS AS INDICATED ON DRAWINGS.

6. INSTALL FURNISHED GALVANIZED STEEL WAVEGUIDE LADDER.

7. INSTALL WAVEGUIDE BRIDGE AS INDICATED ON DRAWING.

8. SUPPLY AND INSTALL ONE INSULATED GROUND BAR AT EQUIPMENT CABINET.

9. SUPPLY AND INSTALL GROUNDING STRAP KITS WITH LONG BARREL COMPRESSION LUGS (SIM. TO ANDREW-223700TBD OR APPROVED EQUAL) ATOP TOWER BASE BEFORE ENTERING THE EQUIPMENT. GROUNDING STRAPS TO BE CONNECTED TO INSULATED GROUND BAR.

10. ASSIST OWNER TECHNICIANS IN PERFORMING SWEEP TEST OF INSTALLED COAX.

11. CONCRETE PIERS FOR FOUNDATIONS SHALL BE DRILLED AND POURED ON THE SAME DAY.

1.2 REQUIREMENTS OF REGULATOR AGENCIES

1. FURNISH U.L. LISTED EQUIPMENT WHERE SUCH LABEL IS AVAILABLE, INSTALL IN CONFORMANCE WITH U.L. STANDARDS WHERE APPLICABLE.

2. INSTALL ANTENNA, ANTENNA CABLES, GROUNDING SYSTEM IN ACCORDANCE WITH DRAWINGS AND SPECIFICATION IN EFFECT AT PROJECT LOCATION AND RECOMMENDATIONS OF STATE AND LOCAL BUILDING CODES, SPECIAL CODES HAVING JURISDICTION OVER SPECIFIC PORTIONS OF WORK. THIS INCLUDES BUT IS NOT LIMITED TO THE FOLLOWING:

   A. TIA – TELECOMMUNICATIONS INDUSTRY ASSOCIATION TIA-222-G. STRUCTURAL STANDARDS FOR STEEL ANTENNA TOWERS AND ANTENNA SUPPORTING STRUCTURES.

   B. FAA – FEDERAL AVIATION ADMINISTRATION ADVISORY CIRCULAR AC 70/7460-IH, OBSTRUCTION MARKING AND LIGHTING.

   C. FCC – FEDERAL COMMUNICATIONS COMMISSION RULES AND REGULATIONS FORM 715, OBSTRUCTION MARKING AND LIGHTING SPECIFICATIONS FOR ANTENNA STRUCTURES AND FORM 715A, HIGH INTENSITY OBSTRUCTION LIGHTING SPECIFICATIONS FOR ANTENNA STRUCTURES.

   D. AISC – AMERICAN INSTITUTE OF STEEL CONSTRUCTION SPECIFICATION FOR STRUCTURAL JOINTS USING ASTM A325 OR A490 BOLTS.

   E. NEC – NATIONAL ELECTRICAL CODE – ON TOWER LIGHTING KITS.

   F. UL – UNDERWRITER'S LABORATORIES APPROVED ELECTRICAL PRODUCTS.

   G. IN ALL CASES, PART 77 OR THE FAA RULES AND PARTS 17 AND 22 OF THE FCC RULES ARE APPLICABLE AND IN THE EVENT OF CONFLICT, SUPERSEDE ANY OTHER STANDARDS OR SPECIFICATIONS.

   H. 2012 LIFE SAFETY CODE NFPA -101.

GENERAL ELECTRIC PROVISION:

1. SUBMITTAL OF BID INDICATES CONTRACTOR IS COGNIZANT OF ALL JOB SITE CONDITIONS AND WORK TO BE PERFORMED UNDER THIS CONTRACT.

2. CONTRACTOR SHALL PERFORM ALL VERIFICATION OBSERVATIONS TEST, AND EXAMINATION WORK PRIOR TO THE ORDERING OF THE ELECTRICAL EQUIPMENT AND THE ACTUAL CONSTRUCTION. CONTRACTOR SHALL ISSUE A WRITTEN NOTICE OF ALL FINDINGS TO THE ARCHITECT LISTING ALL MALFUNCTIONS, FAULTY EQUIPMENT AND DISCREPANCIES.

3. HEIGHTS SHALL BE VERIFIED WITH OWNER PRIOR TO INSTALLATION.

4. THESE PLANS ARE DIAGRAMMATIC ONLY, FOLLOW AS CLOSELY AS POSSIBLE.

5. ELECTRICAL SERVICE 120 / 208 VAC 3-PHASE 4-WIRE 100 AMP SERVICE 120 / 240 VAC SINGLE PHASE 3-WIRE 200 AMP SERVICE

6. EACH CONDUCTOR OF EVERY SYSTEM SHALL BE PERMANENTLY TAGGED IN EACH PANEL BOARD, PULL BOX, J-BOX, SWITCH BOX, ETC., IN COMPLIANCE WITH OCCUPATIONAL SAFETY AND HEALTH ACT (O.S.H.A.).

7. CONTRACTOR SHALL PROVIDE ALL LABOR, MATERIALS, INSURANCE, EQUIPMENT, INSTALLATION, CONSTRUCTION TOOLS, TRANSPORTATION, ETC., FOR A COMPLETE AND PROPERLY OPERATIVE SYSTEM ENERGIZED THROUGHOUT AND AS INDICATED ON DRAWINGS, AS SPECIFIED HEREIN AND/OR AS OTHERWISE REQUIRED.

8. ALL MATERIALS AND EQUIPMENT SHALL BE NEW AND IN PERFECT CONDITION WHEN INSTALLED AND SHALL BE OF THE BEST GRADE AND OF THE SAME MANUFACTURER THROUGHOUT FOR EACH CLASS OR GROUP OF EQUIPMENT. MATERIALS SHALL BE LISTED "J" WHERE SUBJECT TO SUCH APPROVAL. MATERIALS SHALL MEET WITH APPROVAL OF THE DIVISION OF INDUSTRIAL SAFETY AND ALL GOVERNING BODIES HAVING JURISDICTION. MATERIALS SHALL BE MANUFACTURED IN ACCORDANCE WITH APPLICABLE STANDARDS ESTABLISHED BY ANSI, NEMA AND NBFU.

9. ALL CONDUIT INSTALLED SHALL BE SURFACE MOUNTED OR DIRECT BURIAL UNLESS OTHERWISE NOTED.

10. CONTRACTOR SHALL CARRY OUT THEIR WORK IN ACCORDANCE WITH ALL GOVERNING STATE, COUNTY AND LOCAL CODES AND O.S.H.A.

11. CONTRACTOR TO OBTAIN ALL PERMITS, PAY PERMIT FEES, AND BE RESPONSIBLE FOR SCHEDULING INSPECTIONS.

12. COMPLETE JOB SHALL BE GUARANTEED FOR A PERIOD OF ONE (1) YEAR AFTER THE DATE OF JOB ACCEPTANCE BY OWNER. ANY WORK, MATERIAL OR EQUIPMENT FOUND TO BE FAULTY DURING THAT PERIOD SHALL BE CORRECTED AT ONCE, UPON WRITTEN NOTIFICATION, AT THE EXPENSE OF THE CONTRACTOR.

13. ALL CONDUIT SHALL HAVE A PULL WIRE OR ROPE.

14. PROVIDE PROJECT MANAGER WITH ONE SET OF COMPLETE ELECTRICAL "AS INSTALLED" DRAWINGS AT THE COMPLETION OF THE JOB, SHOWING ACTUAL DIMENSIONS, ROUTINGS AND CIRCUITS.

15. ALL BROCHURES, OPERATING MANUALS, CATALOGS, SHOP DRAWINGS, ETC., SHALL BE TURNED OVER TO THE OWNER AT JOB COMPLETION.

16. USE T-TAP CONNECTIONS ON ALL MULTI-CIRCUITS WITH COMMON NEUTRAL CONDUCTOR FOR LIGHTING FIXTURES.

17. ALL CONDUCTORS SHALL BE COPPER.

18. ALL CIRCUIT BREAKERS, FUSES AND ELECTRICAL EQUIPMENT SHALL HAVE AN INTERRUPTING SHORT CIRCUIT CURRENT TO WHICH THEY MAY BE SUBJECTED, AND A MINIMUM OF 10,000 A.I.C.

19. THE ENTIRE ELECTRICAL INSTALLATION SHALL BE GROUNDED AS REQUIRED BY ALL APPLICABLE CODES.

20. PATCH, REPAIR AND PAINT ANY AREA THAT HAS BEEN DAMAGED IN THE COURSE OF THE ELECTRICAL WORK.

21. PENETRATIONS IN FIRE RATED WALLS SHALL BE FIRE STOPPED IN ACCORDANCE WITH APPLICABLE LOCAL BUILDING CODES.

22. WIRE AND CABLE CONDUCTORS SHALL BE COPPER #12 AWG MINIMUM UNLESS SPECIFICALLY NOTED OTHERWISE ON DRAWINGS.

23. GROUNDING CONDUCTORS SHALL BE SOLID TINNED COPPER UNLESS OTHERWISE NOTED.

Parallel INFRASTRUCTURE

T-Mobile stick together

8550 BRYN MAWR AVENUE,
SUITE 100
CHICAGO, ILLINOIS 60631

CelluSite, LLC

PLANS PREPARED BY:

W-T COMMUNICATION DESIGN GROUP, LLC.
WIRELESS INFRASTRUCTURE
2675 Pratum Avenue
Hoffman Estates, Illinois 60192
PH: (224) 293-6333 FAX: (224) 293-6444
www.wtengineering.com

COPYRIGHT © 2017 W-T COMMUNICATION DESIGN GROUP, LLC.

A&E LICENSE:

JEFFERY GUTOWSKY
PROFESSIONAL ENGINEER
STATE OF WISCONSIN
LICENSE # 0035509-006
EXPIRES: 07/31/2018 SIGNED: / /

REVISIONS:

DATE	DESCRIPTION	BY	REV
08/01/16	FOR CLIENT REVIEW	ATK	A
10/11/16	REVISIONS	RSM	B
01/03/17	REVISIONS	RSM	C
01/04/17	REVISIONS	RSM	D

SITE INFORMATION:

ML91104B

CHAPEL HILL RL

6131 W. CHAPEL HILL ROAD
MEQUON, WI 53097
OZAUKEE COUNTY

W-T PROJECT NUMBER:

T1601045

SHEET TITLE:

GENERAL NOTES

SHEET NUMBER:

T-2

Attachment: packet (2070 : Cellusite, LLC)

24. METER SOCKET AMPERES, VOLTAGE, NUMBER OF PHASES SHALL BE AS NOTED ON THE DRAWINGS, MANUFACTURED BY "SQUARE D COMPANY", OR APPROVED EQUAL.

25. ALL MATERIALS SHALL BE U.L. LISTED.

26. CONDUIT

    A. RIGID CONDUIT SHALL BE U.L. LABEL GALVANIZED ZINC COATED WITH ZINC INTERIOR AND SHALL BE USED WHEN INSTALLED IN OR UNDER CONCRETE SLABS IN CONTACT WITH THE EARTH, UNDER PUBLIC ROADWAYS, IN MASONRY WALLS OR EXPOSED ON BUILDING EXTERIOR. RIGID CONDUIT IN CONTACT WITH EARTH SHALL BE 1/2 LAPPED WRAPPED WITH HUNTS WRAP PROCESS NO. 3

    B. ELECTRICAL METALLIC TUBING SHALL HAVE U.L. LABEL, FITTING SHALL BE GLAND RING COMPRESSION TYPE. EMT SHALL BE USED ONLY FOR INTERIOR RUNS.

    C. FLEXIBLE METALLIC CONDUIT SHALL HAVE U.L. LISTED LABEL AND MAY BE USED WHERE PERMITTED BY CODE. FITTINGS SHALL BE "JAKE" OR "SQUEEZE" TYPE, SEAL TIGHT FLEXIBLE CONDUIT. ALL CONDUIT SHALL HAVE FULL SIZE EQUIPMENT GROUND WIRE.

    D. CONDUIT RUNS SHALL BE SURFACE MOUNTED IN CEILINGS OR WALLS UNLESS INDICATED OTHERWISE. CONDUIT INDICATED SHALL RUN PARALLEL OR AT RIGHT ANGLES TO CEILING, FLOOR OR BEAMS. VERIFY EXACT ROUTING OF ALL EXPOSED CONDUIT WITH THE OWNER PRIOR TO INSTALLING. NO HORIZONTAL CONDUITS SHALL BE BELOW 7'–6" A.F.F. NO BX OR ROMEX CABLE IS PERMITTED.

    E. PARALLEL UNDERGROUND CONDUIT SHALL BE PVC SCHEDULE 40 (UNLESS NOTED OTHERWISE) AT A MINIMUM DEPTH OF 30" BELOW GRADE – STACKED UNDERGROUND CONDUIT SHALL BE PVC SCHEDULE 40 (UNLESS NOTED OTHERWISE) AT A MINIMUM DEPTH OF 24" BELOW GRADE.

    F. ABOVE GROUND CONDUIT SHALL BE P.V.C. SCHEDULE 80 (UNLESS NOTED OTHERWISE).

27. ALL ELECTRICAL EQUIPMENT SHALL BE LABELED WITH PERMANENT ENGRAVED PLASTIC LABELS.

28. CONTRACTOR TO PROVIDE DAILY UPDATES TO PM UNTIL FINAL ELECTRICAL SERVICE IS EFFECTED.

29. UPON COMPLETION OF WORK, CONDUCT CONTINUITY, SHORT CIRCUIT, AND FALL OF POTENTIAL GROUND TESTS FOR APPROVAL. SUBMIT TEST REPORTS TO PROJECT MANAGER. CLEAN PREMISES OF ALL DEBRIS RESULTING FROM WORK AND LEAVE WORK IN A COMPLETE AND UNDAMAGED CONDITION.

30. CONTRACTOR TO COORDINATE WITH UTILITY COMPANY FOR CONNECTION OF TEMPORARY AND PERMANENT POWER TO THE SITE. THE TEMPORARY POWER AND ALL HOOKUP COSTS TO BE PAID BY CONTRACTOR.

GROUNDING STANDARDS:

1.0 DEFINITIONS

AGB:	ANTENNA GROUND BAR
AWG:	AMERICAN WIRE GAUGE
CADWELDING:	AN EXOTHERMIC WELDING PROCESS WHICH CREATES POSITIVE CONTACT OF POSITIVE CONTACT OF GROUNDING CONDUCTORS
EMT:	ELECTRICAL METAL TUBING (LIGHT GAUGE METALLIC CONDUIT)
MGB:	MASTER GROUND BAR
PVC:	POLYVINYL CHLORIDE CONDUIT
RFI:	RADIO FREQUENCY INTERFERENCE
TGB:	TOWER GROUND BAR
THWN:	LETTER TYPE DESIGNATION FOR CONDUCTOR INSULATION THAT IS A MOISTURE AND HEAT RESISTANT THERMOPLASTIC WITH A MAXIMUM OPERATING TEMPERATURE OF 75 DEGREES CELSIUS OR 167 DEGREE FAHRENHEIT
T/I:	TENANT IMPROVEMENT

2.0 BACKGROUND

2.1 AREAS OF CONCERN: WHEN DESIGNING A GROUNDING SYSTEM FOR A MOBILE RADIO FACILITY THERE ARE FOUR INTERRELATED AREAS OF CONCERN. THE BASIC OBJECTIVE FOR EACH IS:

1. LIGHTNING PROTECTION –TO MAINTAIN ALL EQUIPMENT AT THE SAME POTENTIAL DURING A LIGHTNING IMPULSE.

2. RFI FOR NOISE INDUCTION CONTROL –TO ESTABLISH THE LOWEST POSSIBLE IMPEDANCE AMONG ALL EQUIPMENT.

3. ELECTROSTATIC CONTROL –TO REDUCE ELECTROSTATIC DISCHARGE PROBLEMS.

4. PERSONNEL SAFETY –TO MAINTAIN A MINIMUM VOLTAGE DIFFERENCE BETWEEN ANY TWO METALLIC OBJECTS WHICH PERSONNEL MIGHT CONTACT SIMULTANEOUSLY.

2.2 A/C GROUNDING: IN THIS GROUNDING SYSTEM THE A/C SERVICE GROUND SHALL BE KEPT ISOLATED FROM THE EQUIPMENT FRAME WORK AND LIGHTNING PROTECTION GROUND SYSTEMS EXCEPT FOR ONE SPECIFIC POINT. THIS POINT IS THE MAIN GROUNDING POINT OF THE SYSTEM. THIS WOULD TYPICALLY BE CONNECTING THE A/C SERVICE GROUND AT THE COMMERCIAL POWER RISER POLE DISCONNECT/METER BASE TO THE EXTERNAL GROUND RING. ALL GROUNDING CONNECTIONS INSIDE OF CABINETS SHALL BE SCRAPED TO BARE METAL AND COATED WITH NOALOX.

2.3 LIGHTNING CONSIDERATIONS: LIGHTNING DAMAGE OCCURS FROM EITHER INDUCTION OR FROM AN ACTUAL DIRECT STRIKE TO THE BUILDING, USUALLY TAKEN THROUGH THE TOWER AND/OR ANTENNAS. STRIKES TO OTHER NEARBY OBJECTS INDUCE HIGH ENERGY INTO POWER OR TELEPHONE CABLES ENTERING THE BUILDING. THIS TYPE OF EFFECT HISTORICALLY CAUSES MOST OF THE DAMAGE TO THE BUILDING AND ITS CONTENTS.

3.0 STATION GROUNDING SYSTEM

3.1 MATERIALS:

1. #2 AWG, BARE SOLID TINNED COPPER WIRE, FOR ALL EXTERIOR CONDUCTORS AND TOWER GROUND BAR CONDUCTORS OR AS OTHERWISE SPECIFIED. GROUNDS TO THE LNAS SHALL BE NO. 6 STANDARD GREEN INSULATED JUMPERS. THE GROUND WIRE TO THE MGB SHALL BE GREEN JACKETED STRANDED #2 TINNED WIRE BURNDY CONNECTED TO THE BUSS BAR AND CONNECTED TO THE GROUND RING ON A GROUND ROD.

2. #2 AWG, INSULATED STRANDED COPPER CABLE IS ACCEPTABLE FOR INTERIOR GROUND BAR CONDUCTORS ON TENANT IMPROVEMENT SITES.

3. 5/8" X 10" GROUND RODS OF SOLID COPPER, STAINLESS STEEL OR COPPER CLAD HIGH STRENGTH STEEL.

4. ABOVE GRADE CONNECTIONS SHALL BE BURNDY HYGROUND COMPRESSION. BELOW GRADE CONNECTIONS SHALL BE EXOTHERMIC WELD OR OTHER APPROVED EXOTHERMIC WELDING SYSTEM FOR BONDING AS SPECIFIED.

5. XIT OR ADVANCED GROUNDING ELECTRODE (AGE), ALL CHEMICAL GROUND RODS SHALL BE UL APPROVED.

6. SOLID COPPER PLATES OF MINIMUM 3'X3'X1/4" SIZE AS SPECIFIED.

7. NOALOX OR APPROVED EQUAL CONDUCTIVE MEDIUM MATERIAL SHALL BE USED IN ALL MECHANICAL CONNECTIONS.

8. #2 AWG STRANDED INSULATED (GREEN) FOR ALL INTERNAL EQUIPMENT GROUNDING.

9. MECHANICAL FASTENERS (I.E., DOUBLE LUGS, SPLIT BOLTS PARALLEL CONNECTORS) SHALL BE BRONZE, BRASS, COPPER OR STAINLESS STEEL AND HAVE NOALOX BETWEEN CONDUCTOR AND CONNECTION.

10. BOLTS, NUTS AND SCREWS USED TO FASTEN MECHANICAL CONNECTORS SHALL BE STAINLESS STEEL WITH STAR TYPE STAINLESS STEEL LOCK WASHERS.

11. ALL LUG TUBE FASTENERS SHALL PROVIDE TWO HOLES TO ALLOW A DOUBLE BOLT CONNECTION.

3.2 MASTER GROUND BAR (MGB): THE PURPOSE OF THE MASTER GROUND BAR IS TO GROUND THE BTS AND ANY OTHER METALLIC OBJECTS AROUND THE BTS. IF AN MGB IS NOT PROVIDED WITH THE BTS, THE MGB SHALL BE AS FOLLOWS: THE MGB IS A COPPER BAR MEASURING 4"W X 24"L X 1/4" LOCATED AS CLOSE TO THE BTS AS POSSIBLE. THE MGB SHALL HAVE A MINIMUM NUMBER OF (28) 3/8" HOLES. GROUND BAR SHALL BE SUPPORTED BY MOUNTING BRACKETS WITH INSULATOR STANDOFFS. (2) #2 TINNED SHALL BE MECHANICALLY ATTACHED (2–HOLE COMPRESSION LUG 3/8" HOLES, 1" CENTER TO CENTER SPACING) TO THE MGB AND DOWN LEADS THEN TAKEN THROUGH CONDUIT TO THE GROUND RING. THIS CONDUCTOR SHALL BE KEPT SEPARATE AND ISOLATED UNTIL TERMINATING AT THE MAIN GROUNDING POINT, (I.E. EXTERIOR GROUND RING OR BUILDING STEEL).

3.3 ANTENNA GROUND BAR (AGB): THE PURPOSE OF THE ANTENNA GROUND BAR IS PRIMARILY FOR LIGHTNING PROTECTION. COAXIAL CABLE IS USUALLY THE ONLY ITEM GROUNDED TO THIS BAR. HOWEVER IT IS ACCEPTABLE TO BOND EXTERIOR; CABLE TRAY, WAVE GUIDE PORTS AND CANTILEVERED WAVE GUIDE BRIDGES TO THE AGB. THE AGB IS A COPPER BAR MEASURING 4"W X 24"L X 1/4". THERE SHALL BE TWO AGBS, ONE LOCATED AT THE TOP OF THE TOWER AT THE START OF THE VERTICAL RUN OF COAX, THE OTHER AT THE BOTTOM OF THE VERTICAL RUN OF COAX BEFORE IT MAKES ITS BEND. (IF THE TOWER IS OVER 200' THERE SHALL BE A THIRD AGB LOCATED AT HE MIDDLE OF THE TOWER).THE AGB SHALL HAVE A MINIMUM OF (28) 3/8" HOLES. GROUND BARS SHALL BE SUPPORTED BY MOUNTING BRACKETS WITH INSULATOR STANDOFFS. USE #2 AWG SOLID TINNED WIRE W/ 2–HOLE SHORT BARREL COMPRESSION LUGS 3/8" HOLES, 1" CENTER TO CENTER SPACING). THIS CONDUCTOR SHALL BE KEPT SEPARATE AND ISOLATED UNTIL TERMINATING AT THE MAIN GROUNDING POINT (I.E. EXTERIOR GROUND RING, OR BUILDING STEEL.)

3.4 SURGE ARRESTOR GROUND BAR: THE PURPOSE OF THE SURGE ARRESTOR GROUND BAR IS FOR LIGHTING PROTECTION. THE SURGE ARRESTOR GROUND BAR IS A BENT (3" X 3") X 1/4" X 24" COPPER BAR. IT IS LOCATED ON THE WAVEGUIDE BRIDGE SUPPORT CLOSEST TO THE EQUIPMENT. ONE FACE OF THE BAR SHALL HAVE A MINIMUM OF (28) 3/8" DIA. HOLES. HOLES SHALL BE IN PAIRS THAT ARE 1" CENTER TO CENTER. THE OTHER FACE SHALL HAVE 3/8" DIA. HOLES AS REQUIRED TO ATTACH AND GROUND COAXIAL SURGE ARRESTORS. THE GROUND BAR SHALL BE SUPPORTED BY MOUNTING BRACKETS WITH INSULATOR STANDOFFS.

3.5 GROUND ROD AND GROUND RING PLACEMENT: THE OUTSIDE GROUND RING SHALL BE PLACED AROUND THE BTS AT A DISTANCE OF TWO (2) FEET FROM THE BTS AT A DEPTH OF 2'–6" OR 6" BELOW THE FROST LINE, WHICHEVER IS DEEPER. RODS SHALL BE DRIVEN TO A DEPTH SUCH THAT THE TOP OF THE RODS IS AT THE LEVEL OF THE GROUND RING CONDUCTOR. THE RODS SHALL BE PLACED MINIMALLY ALONG THE RING AT THE FOLLOWING LOCATIONS:

A. BELOW THE AREA OF THE INTERNAL MASTER GROUND BAR FOR CONNECTION TO THE MGB.

B. BELOW THE UTILITY RACK FOR CONNECTION TO THE MAIN BUILDING COMMERCIAL POWER DISCONNECT.

C. BELOW THE CORNERS OF THE BTS.

D. AS REQUIRED TO ACHIEVE A RECOMMENDED SPACING OF TWENTY (20) FEET BETWEEN GROUND RODS ALONG THE RING PERIMETER.

E. AS REQUIRED ALONG THE RING PERIMETER TO ACHIEVE 5 OHMS OR LESS RESISTANCE WHEN TESTED.

F. TWO RODS LOCATED ON OPPOSITE SIDES AT EACH TOWER LEG OR MONOPOLE.

G. ONE ROD LOCATED BENEATH EACH END OF THE WAVE GUIDE BRIDGE OR CABLE TRAY.

H. ONE ROD LOCATED ADJACENT TO THE STANDBY GENERATOR, AND IF SEPARATED BY MORE THAN TEN (10) FEET, ONE LOCATED ADJACENT TO THE FUEL TANK.

I. ONE ROD LOCATED AT THE BASE OF THE TOWER FOR THE TGB.

3.6 TOWER GROUNDING: ALL MONOPOLES SHALL HAVE TWO GROUND RODS (MINIMUM). ALL OTHER TOWERS SHALL HAVE TWO GROUND RODS PLACED AT THE BASE OF EACH TOWER LEG. EACH MONOPOLE OR TOWER LEG SHALL BE BONDED TO THE SYSTEM VIA TWO #2 BARE TINNED SOLID COPPER CONDUCTORS. BURNDY CONNECT THE CONDUCTORS TO ONLY STRUCTURAL BASE PLATES OR LUGS OR EARS AS MAY BE PROVIDED. NO BURNDY CONNECTIONS SHALL BE MADE TO THE VERTICAL WALLS OF THE STRUCTURE. NEVER GROUND TO HOLLOW LEG MEMBERS.

3.7 ANTENNA GROUNDING: EACH ANTENNA COAXIAL CABLE SHALL TYPICALLY BE GROUNDED AT THREE POINTS USING A HARD–SHELL COAXIAL CABLE KIT FROM THE MANUFACTURER OF THE ANTENNA CABLE. A TYPICAL INSTALLATION SHALL BE AS FOLLOWS:

A. THE FIRST GROUND CONNECTION SHALL OCCUR AS CLOSE TO THE ANTENNA AS POSSIBLE, BELOW THE FIRST POINT THE COAX CABLE BEGINS TO RUN VERTICAL DOWN THE TOWER. THIS GROUND SHALL TERMINATE DIRECT TO THE TOP AGB. ON A T/I, GROUND TO THE AGB AT THE ANTENNA MOUNTS.

B. THE SECOND GROUND SHALL BE MADE AT THE BOTTOM OF THE VERTICAL RUN OF THE COAXIAL CABLE AS IT TURNS OUT AWAY FROM THE TOWER TOWARDS THE BTS. THIS GROUND SHALL BE TERMINATED AT THE TGB. THE TGB SHALL HAVE TWO (2) LEADS OF #2 AWG BARE TINNED SOLID COPPER WIRE, AND SHALL TERMINATE AT THE TOWER GROUND RING. THESE SHALL BE ENCASED IN PVC PIPE.

C. THE THIRD GROUND SHALL BE ON THE SURGE ARRESTOR. GROUND TO BE ATTACHED TO THE CABLE ON STRAIGHT RUNS (NOT WITHIN BENDS) AND BE WEATHERPROOFED PER THE MANUFACTURER'S SPECIFICATIONS. THE SURGE ARRESTORS SHALL BE GROUNDED TO THE GROUND BAR. THE SAGB SHALL HAVE TWO (2) LEADS OF #2 AWG BARE TINNED SOLID COPPER WIRE, AND SHALL TERMINATE AT THE TOWER GROUND RING. THESE SHALL BE ENCASED IN PVC PIPE.

3.8 PERIMETER FENCE GROUNDING:

A. ALL FENCE CORNER AND END POSTS (MINIMUM OF TWO) SHALL HAVE ONE #2 SOLID TINNED COPPER GROUND WIRE CONNECTED TO A 5/8" X 10' SOLID COPPER CLAD GROUND ROD NEXT TO THE POST. THESE POSTS SHALL BE CONNECTED TO THE GROUND RING WITH A #2 SOLID TINNED COPPER GROUND WIRE AND INTERMEDIATE GROUND RODS IF THE DISTANCE FROM THE POST TO THE GROUND RING EXCEEDS 10 FEET. IN NO CASE SHALL ANY PORTION OF THE SAME FENCE REMAIN DISCONNECTED FROM THE GROUND RING.

B. GATE POSTS SHALL BE GROUNDED TO EACH OTHER TO ENSURE THE ENTIRE FENCE HAS ELECTRICAL CONTINUITY. CONNECTIONS SHALL BE DRILL AND TAP WITH BURNDY TYPE KC22 TO THE POST WITH A #2 AWG BARE SOLID TINNED COPPER WIRE.

C. GATES SHALL BE BONDED TO GATE POSTS WITH A 18" BRAIDED STRAP TYPE BD18G92. THE CONNECTIONS SHALL BE BURNDY 2–HOLE LUGS (3/8" HOLES, 1" CENTER TO CENTER) BOLTED THROUGH EACH POST.

D. ALL DOWN LEADS TO EARTH WILL BE ENCASED IN 3/4 INCH PVC NON–METALLIC AND SEALED WITH SILICONE.

3.9 GENERATOR FUEL TANK GROUNDING: THE GENERATOR FUEL TANK, IF REQUIRED, SHALL BE CONNECTED IN AT LEAST ONE PLACE TO THE MAIN EXTERIOR GROUND RING. #2 AWG BARE SOLID TINNED COPPER WIRE SHALL BE BURNDY CONNECTED TO ONE SUPPORT LEG OF THE FUEL TANK AND EXOTHERMIC WELD TO THE NEAREST EXTERIOR GROUND RING/GROUND ROD.

3.10 EQUIPMENT ROOM GROUNDING: THE MASTER GROUND BAR (MGB) SERVES AS THE COLLECTION POINT FOR THE BTS AS WELL AS ALL INTERIOR NON–ELECTRICAL GROUNDED METAL MATERIALS (HVAC GRILLS, DOOR FRAMES/DOORS, TELCO BOARD, UNISTRUTS, CABLE TRAYS, ALARM JUNCTION BOX, ETC.,) SHALL BE GROUNDED WITH #6 AWG STRANDED (GREEN) GROUND WIRES WITH INDIVIDUAL RUNS BACK TO THE MGB. (THE CABLE TRAY, DOOR/FRAME AND UNISTRUT MAY BE JUMPERED TOGETHER AND HAVE A SINGLE GROUND WIRE CONNECTION TO THE MGB.)

3.11 WALL PENETRATIONS SLEEVES: INSTALL PER CONSTRUCTION DRAWINGS.

3.12 A/C COMMERCIAL POWER GROUNDING CONNECTIONS: AT THE ON–SITE RISER POLE LOCATION OR UNDERGROUND SERVICE ENTRANCE LOCATION, THE A/C SERVICE SHALL BE MECHANICALLY BONDED TO THE A/C SERVICE ENTRANCE GROUND AS SPECIFIED BY THE NATIONAL ELECTRIC CODE, ARTICLE 250, AND/OR APPROPRIATE LOCAL CODES. A SEPARATE GROUND ROD SHALL BE PROVIDED AT THIS POINT, AND SHALL BE CONNECTED TO THE EXTERIOR GROUND RING. A SEPARATE A/C SERVICE GROUND AND NEUTRAL SHALL THEN BE ROUTED TO AND CONNECTED TO THE MAIN DISCONNECT INSIDE THE BUILDING OR AS REQUIRED BY LOCAL AUTHORITY.

3.13 GENERATOR RECEPTACLE GROUNDING: THE GENERATOR RECEPTACLE (HUBBLE PLUG) SHALL BE GROUNDED TO THE EGR.

Parallel INFRASTRUCTURE

T-Mobile stick together

8550 BRYN MAWR AVENUE,
SUITE 100
CHICAGO, ILLINOIS 60631

CelluSite, LLC

PLANS PREPARED BY:

W-T COMMUNICATION DESIGN GROUP, LLC.
WIRELESS INFRASTRUCTURE
2675 Pratum Avenue
Hoffman Estates, Illinois 60192
PH: (224) 293-6333 FAX: (224) 293-6444
www.wtengineering.com

COPYRIGHT © 2017 W-T COMMUNICATION DESIGN GROUP, LLC.

A&E LICENSE:

JEFFERY GUTOWSKY
PROFESSIONAL ENGINEER
STATE OF WISCONSIN
LICENSE # 0035509–006
EXPIRES: 07/31/2018 SIGNED: / /

REVISIONS:

DATE	DESCRIPTION	BY	REV
08/01/16	FOR CLIENT REVIEW	ATK	A
10/11/16	REVISIONS	RSM	B
01/03/17	REVISIONS	RSM	C
01/04/17	REVISIONS	RSM	D

SITE INFORMATION:

ML91104B

CHAPEL HILL RL

6131 W. CHAPEL HILL ROAD
MEQUON, WI 53097
OZAUKEE COUNTY

W-T PROJECT NUMBER:

T1601045

SHEET TITLE:

GENERAL NOTES

SHEET NUMBER:

T-3

Attachment: packet (2070 : CelluSite, LLC)

3.14 COAX BRIDGE / CABLE TRAY GROUNDING : BOND THE COAX BRIDGE OR CABLE TRAY TO THE AGB WITH #2 SOLID TINNED GROUND WIRE. THESE CONNECTIONS SHALL BE DOUBLE LUG BOLTED / SCREWED MECHANICAL CONNECTIONS WITH STAR LOCK WASHERS AND NOALOX. ALL BRIDGE SPLICES SHALL HAVE JUMPERS OF #2 SOLID WITH COMPRESSION LUGS.

3.15 EXOTHERMIC WELD & BURNDY CONNECTION: EXOTHERMIC WELDS AND BURNDY CONNECTIONS SHALL BOND ALL UNDERGROUND AND DAMP LOCATION CONNECTIONS, SHELTER SKID GROUNDS, TOWER OR MONOPOLE GROUNDS, FENCING CORNER AND GATE POSTS, ANTENNA GROUND BARS, (AGB) SURGE ARRESTER GROUND BAR, AND THE MASTER GROUND BAR (MGB). MECHANICAL CONNECTIONS SHALL BE TYPICALLY USED TO BOND ALL INTERIOR EQUIPMENT, COAX CABLE BRIDGES AND COAXIAL CABLE GROUND KITS. ALL LUG TYPE MECHANICAL CONNECTORS TO THE MGB OR AGB SHALL BE TWO HOLE TYPE CONNECTED WITH STAINLESS STEEL BOLTS AND NUTS WITH STAINLESS STEEL LOCK WASHERS AND NOALOX ON EITHER SIDE OF THE BUSS BAR.

3.16 CHEMICAL GROUND RODS: CHEMICAL GROUND RODS SHALL NOT BE INSTALLED ON GROUND RING INSTALLATIONS WITH NORMAL SOIL. CHEMICAL GROUND RODS SHALL BE INSTALLED ONLY FOR SPECIAL DESIGN APPLICATIONS THAT REQUIRE SINGLE POINT GROUNDING DUE TO SPECIFIC SITE CONDITIONS.

3.17 TENANT IMPROVEMENT SITE GROUNDING: FOR ROOF TOP ANTENNA INSTALLATIONS ADDITIONAL ANTENNA GROUND BARS MAY HAVE TO BE INSTALLED AT EACH ANTENNA MOUNT LOCATION. ALL ANTENNA MOUNTS SHALL BE GROUNDED WITH A #2 AWG CONDUCTOR CONNECTED TO THE NEAREST BUILDING STEEL OR THE AGB INSTALLED AT THE MOUNT. ALL BUSS BARS, BOTH MGB AND AGB(S), SHALL BE INDEPENDENTLY TIED TO THE NEAREST BUILDING STEEL OR DESIGNATED GROUNDING SYSTEM. NO GROUND WIRE IS TO CONNECT THE BUSS BARS TOGETHER. AGB(S) MAY BE HOME RUN BACK TO THE MGB WHERE NO BUILDING STEEL IS AVAILABLE.

3.18 LIMITS OF BEND RADIUS: IT IS IMPORTANT THAT THE GROUNDING CONDUCTOR CONNECTING THE INSIDE AND OUTSIDE GROUND SYSTEMS BE AS STRAIGHT AS POSSIBLE, WITH NO TURN OR BEND SHORTER THAN ONE FOOT RADIUS WITH A THREE FOOT RADIUS PREFERRED. NO RIGHT ANGLE OR SHARP BENDS SHALL BE ALLOWED.

3.19 BONDING PREPARATION & FINISH: ALL SURFACES REQUIRE PREPARATION PRIOR TO BONDING OF EITHER EXOTHERMIC WELD OR BURNDY FASTENERS. GALVANIZED SURFACES SHALL BE GROUND OR SANDED TO THE POINT OF EXPOSING THE STEEL SURFACE BELOW, PRIOR TO BONDING THE GROUND CONDUCTOR. FOR OTHER SURFACES INCLUDING COPPER BUSS BARS ALL PAINT, RUST TARNISH AND GREASE SHALL BE REMOVED PRIOR TO BONDING THE GROUND CONDUCTOR. EXOTHERMIC WELD TYPE BONDS SHALL BE FINISHED WITH THE APPLICATION OF COLD GALVANIZATION AND WHEN APPLICABLE, FINISH PAINTED WITH AN APPROPRIATE COLOR AS REQUIRED. MECHANICAL TYPE BONDS ON BUSS BARS SHALL BE FINISHED WITH THE APPLICATION OF NOALOX OR OTHER APPROVED CONDUCTIVE MEDIUM MATERIAL BETWEEN CONNECTOR AND BUSS BAR. MECHANICAL TYPE BONDS ON ALL OTHER SURFACES SHALL BE FINISHED WITH THE APPLICATION OF COLD GALVANIZATION AND/OR THE APPROPRIATE PAINT TO MATCH AS REQUIRED.

3.20 TESTING: THE OUTSIDE GROUND RING SHALL BE TESTED AFTER INSTALLATION BUT PRIOR TO BACKFILLING THE GROUND RING TRENCH. THE GROUND FIELD RESISTANCE SHALL MEASURE 5 OHMS OR LESS TO GROUND. ANY DIFFICULTY IN ACHIEVING THIS LEVEL OF RESISTANCE MUST BE BROUGHT TO THE ATTENTION OF THE PROJECT MANAGER. THE RESISTANCE TO GROUND SHALL BE MEASURED USING THE FALL OF POTENTIAL METHOD. TESTING SHALL BE PERFORMED BY AN OWNER PROVIDED INDEPENDENT TESTING LABORATORY FROM WHICH A WRITTEN REPORT SHALL BE PRODUCED FOR REVIEW BY THE PROJECT MANAGER.

3.21 SPECIAL CONDITIONS: WHEN SOIL CONDITIONS EXIST (I.E., NON-COMPACTABLE ROCK, GRAVEL, SHALE, ETC.) THAT PREVENTS THE INSTALLATION OF THE STANDARD GROUNDING SYSTEM AND PROCEDURES, THEN VERBAL PROCEDURES SHALL BE REQUESTED BY THE PM.

3.22 EXTERNAL GROUND RING: THE EXTERNAL GROUND RING SHALL EXTEND TO THE MAXIMUM ALLOWABLE DEPTH IN 95% COMPACTED SOIL

3.23 GROUND RODS (REPLACEMENT): WHEN GROUND RODS CANNOT BE DRIVEN INTO THE SOIL VERTICALLY TO A DEPTH DESCRIBED IN PARAGRAPH 3.5, AND REMAIN IN 95% COMPACTED SOIL, THEN THE FOLLOWING METHODS OF SUBSTITUTION MAY BE USED. THESE ARE SUGGESTED METHODS ONLY, AND EACH CASE SHOULD BE REVIEWED BY THE T-MOBILE PROJECT MANAGER. THE PURPOSE IS TO ACHIEVE THE LOWEST IMPEDANCE TO GROUND, IN ANY CASE, EQUAL TO OR LESS THAN 5 OHMS.

3.24 ROCK WITH SOME OR NO SOIL COVER: FOR SITES WHICH HAVE SOIL CONDITIONS WHICH CONSIST OF SOLID OR SEMI SOLID ROCK BELOW ABOUT THREE FEET OF COMPATIBLE SOIL, A COMBINATION OF METHODS MAY BE USED:

A. A COMBINATION OF SHORT GROUND RODS MAY BE USED WITH 3' SQUARE 1/4" COPPER PLATES. A MINIMUM OF TWO PLATES SHOULD BE USED AND SHOULD REPLACE GROUND RODS ON AN EQUIVALENCY OF TWO GROUND ROD LENGTHS PER COPPER PLATE. THE COPPER PLATE SHOULD BE PLACED IN A MINIMUM 3" BENTONITE BASE AND COVERED WITH 3" OF BENTONITE FILL PRIOR TO BACKFILL.

B. AN ACTIVE TYPE CHEMICAL ROD SYSTEM MAY BE USED. THIS IS AN ENGINEERING JUDGMENT AND SHOULD BE USED ONLY WHERE NECESSARY, DUE TO EXPENSE. IN ALL CASES, THE STANDARD PRACTICES OUTLINED IN THIS DOCUMENT SHOULD BE FOLLOWED TO THE EXTENT THAT IS APPLICABLE, AND SHOULD BE MODIFIED AS TO THE QUANTITY OF GROUND RODS AND CONDUCTOR SIZE ONLY AS RECOMMENDED BY THE MANUFACTURER OF THE GROUND ROD SYSTEM.

C. A SYSTEM UTILIZING CORED SHAFTS, STANDARD GROUND RODS ON A TYPICAL LAYOUT, WITH A BENTONITE (CLAY) BACKFILL. IN THIS CASE EACH GROUND ROD SHOULD BE TESTED INDIVIDUALLY, AND EACH ROD SHOULD HAVE AN ACCESS BOX PLACED FOR FUTURE TESTING.

3.25 HIGH RISE BUILDING:

A. HIGH RISE BUILDINGS PRESENT A UNIQUE PROBLEM IN GROUNDING. A FACILITY INVESTIGATION SHOULD BE MADE INTO THE STRUCTURE OF THE BUILDING, AND AS TO THE POSSIBLE PRESENCE OF AN EXISTING LIGHTNING PROTECTION SYSTEM. IF ONE IS IN PLACE AND APPEARS ADEQUATE IN DESIGN, IT WILL BE NECESSARY TO CONNECT THE ANTENNA SYSTEM TO THE EXISTING SYSTEM, WITH A TEST TO THE SYSTEM AFTER INSTALLATION TO ENSURE THAT IT HAS NOT CAUSED THE SYSTEM TO EXCEED 5 OHMS.

B. STRUCTURAL STEEL BUILDINGS: IF THE BUILDING IS BUILT OF STRUCTURAL STEEL, IT MAY BE POSSIBLE TO GROUND THE ANTENNAS TO THE BUILDING SITE. IT IS PREFERABLE TO GROUND THE ANTENNAS AND THE SITE TO A DIRECT EARTH CONNECTION, BY USE OF SEPARATE DOWN LEADS OF CONSIDERABLE SIZE (250 MCM OR LARGER) COMING FROM GROUND BUSS BARS TO COLLECT THE GROUND INPUT, AND RUN DOWN A VERTICAL SHAFT OR STAIRWELL TO A PATTERN OF NO LESS THAN FOUR GROUND RODS. WHERE PRACTICAL, THE BUILDING STEEL SHOULD BE BONDED TO THE GROUND RING WITH A SEPARATE LEAD TO THE GROUND ROD FIELD.

C. A SYSTEM STRUCTURAL CONCRETE BUILDINGS ARE MORE DIFFICULT TO GROUND PROPERLY. THE ANTENNAS SHOULD BE GROUNDED TO A SEPARATE BUSS BAR AND DOWN LEAD WHERE THE COAXIAL CABLES ENTER THE BUILDING. THE DOWN LEAD SHOULD BE RUN IN A SIMILAR FASHION AS IN THE STRUCTURAL STEEL EQUIPMENT ROOM. THE DOWN LEADS SHOULD BE PROTECTED IN CONDUIT AND SHOULD BE INSTALLED AS FAR APART AS IS PRACTICAL FROM EACH OTHER. THE SEPARATE DOWN LEADS SHOULD NOT CONTACT EACH OTHER UNTIL CONNECTION WITH THE FIRST GROUND ROD

Know what's **below.**
Call before you dig.

Parallel INFRASTRUCTURE

T-Mobile stick together

8550 BRYN MAWR AVENUE,
SUITE 100
CHICAGO, ILLINOIS 60631

CelluSite, LLC

PLANS PREPARED BY:

W-T COMMUNICATION DESIGN GROUP, LLC.
WIRELESS INFRASTRUCTURE
2675 Pratum Avenue
Hoffman Estates, Illinois 60192
PH: (224) 293-6333 FAX: (224) 293-6444
www.wtengineering.com

COPYRIGHT © 2017 W-T COMMUNICATION DESIGN GROUP, LLC.

A&E LICENSE:

JEFFERY GUTOWSKY
PROFESSIONAL ENGINEER
STATE OF WISCONSIN
LICENSE # 0035509-006
EXPIRES: 07/31/2018 SIGNED: / /

REVISIONS:

DATE	DESCRIPTION	BY	REV
08/01/16	FOR CLIENT REVIEW	ATK	A
10/11/16	REVISIONS	RSM	B
01/03/17	REVISIONS	RSM	C
01/04/17	REVISIONS	RSM	D

SITE INFORMATION:

ML91104B
CHAPEL HILL RL
6131 W. CHAPEL HILL ROAD
MEQUON, WI 53097
OZAUKEE COUNTY

W-T PROJECT NUMBER:
T1601045

SHEET TITLE:
GENERAL NOTES

SHEET NUMBER:
T-4

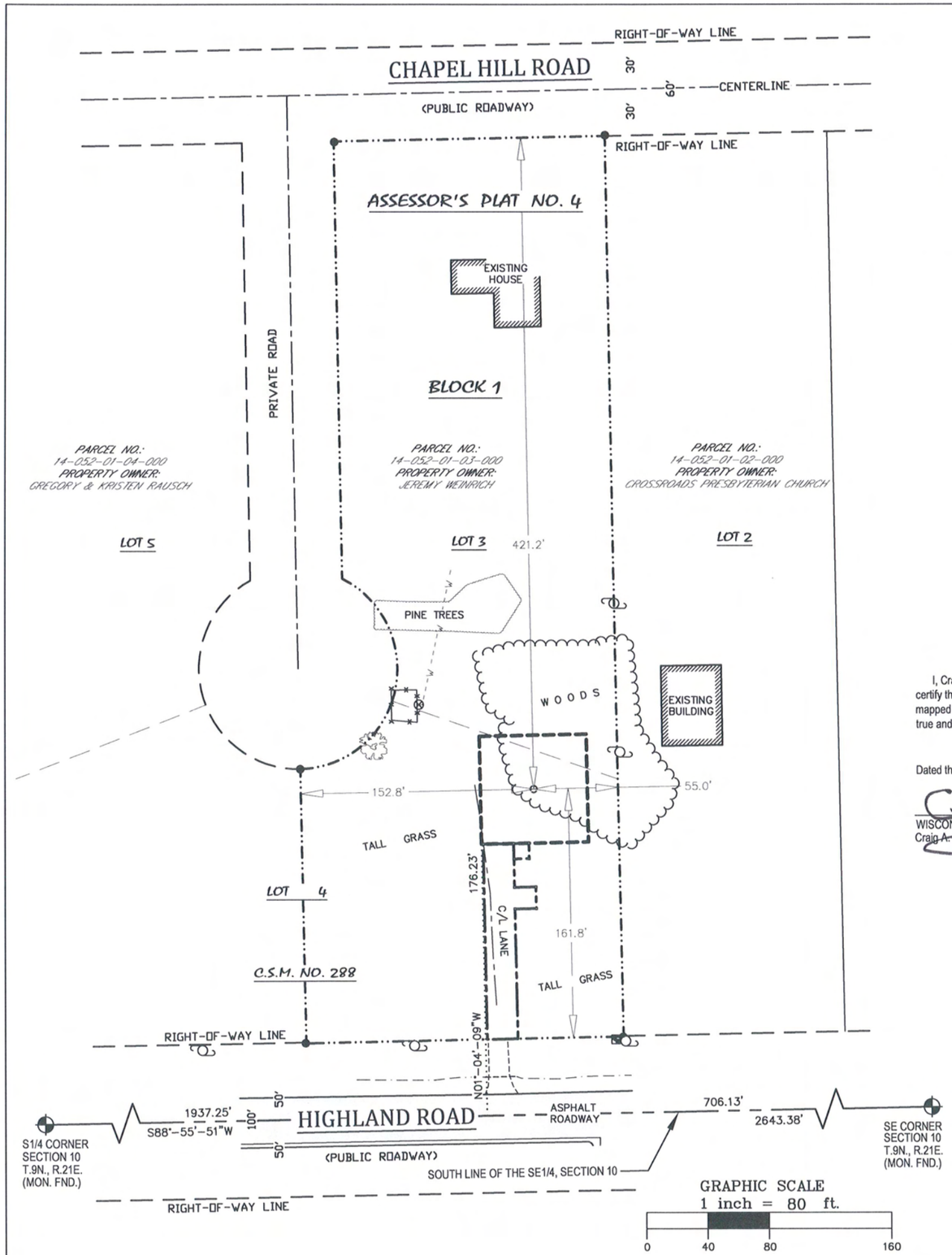

—LEGEND—

- ○ = 1" X 18" IRON PIPE SET
- ● = 1" IRON PIPE FOUND
- ⊗ = WATER VALVE
- = CABLE BOX
- = EXISTING POWER POLE
- —OPL— = OVERHEAD ELECTRIC
- —G— = BURIED GAS
- —E— = BURIED ELECTRIC
- —W— = WATER LINE
- —··— = PROPERTY LINE
- B.O.C. = BACK OF CURB
- = EXISTING TREE

CALL DIGGERS HOTLINE TOLL FREE
1(800)242-8511
OPERATES 24 HOURS A DAY 365 DAYS A YEAR

WARNING
CALL BEFORE YOU DIG
48 HOURS BEFORE YOU DIG

SURVEYOR'S CERTIFICATE

I, Craig A. Keach, Professional Land Surveyor of Meridian Surveying, LLC., certify that under the direction of Parallel Infrastructure, I have surveyed and mapped the proposed area within the specified lands and that the map shown is a true and accurate representation thereof to the best of my knowledge and belief.

Dated this 4th day of OCTOBER, 2016.

Craig A. Keach
WISCONSIN PROFESSIONAL LAND SURVEYOR
Craig A. Keach, S-2333

WISCONSIN
CRAIG A. KEACH
S-2333
NEENAH
WIS.
LAND SURVEYOR

—VICINITY MAP—

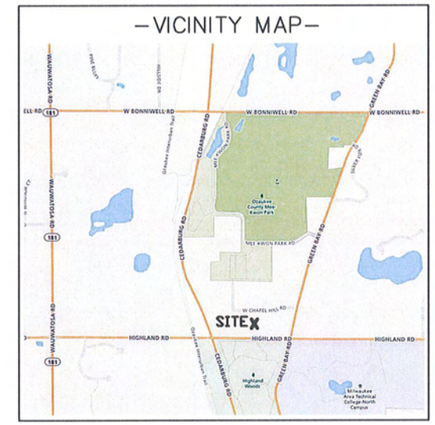

PROPOSED TOWER BASE

LATITUDE: 43°-15'-04.70"
LONGITUDE: 87°-59'-10.68"
(Per North American Datum of 83/2011)

Ground Elevation: 723.3'
(Per North American Vertical Datum of 1988)

BEARINGS REFERENCED TO THE WISCONSIN STATE PLANE COORDINATE SYSTEM (NAD27) - SOUTH ZONE AND THE SOUTH LINE OF THE SE1/4, SECTION 10, T.9N., R.21E., WHICH BEARS: S88°-55'-51"W

N

SURVEY NOTES:

-THE LOCATION OF THE EXISTING UTILITIES, AS SHOWN ON THIS PLAN, ARE APPROXIMATE ONLY. IT SHALL BE THE RESPONSIBILITY OF THE CONTRACTOR TO VERIFY ACTUAL LOCATION AND DEPTH OF ALL EXISTING UTILITIES. THE OWNER AND THE SURVEYOR SHALL NOT BE RESPONSIBLE FOR ANY OMISSION OR VARIATION FROM THE LOCATION SHOWN.

-THIS IS NOT A BOUNDARY SURVEY OF THE PARENT PARCEL. THIS SURVEY REPRESENTS THE LEASED PREMISES AND 20' WIDE ACCESS & UTILITY EASEMENT ONLY.

-NO TITLE SEARCH FOR PARCEL OWNERSHIP OR EXISTENCE OR NONEXISTENCE OF RECORDED OR UNRECORDED EASEMENTS HAS BEEN COMPLETED AS PART OF THIS SURVEY.

FEMA NOTE:
-ACCORDING TO FEDERAL EMERGENCY AGENCY MAPS, THE PROPOSED TELECOMMUNICATIONS SITE IS LOCATED IN ZONE "X", COMMUNITY PANEL NO. 55089C0188F, DATED DECEMBER 04 2007, AND IS NOT IN A SPECIAL FLOOD HAZARD AREA. ZONE "X" IS DESIGNATED AS: "AREAS DETERMINED TO BE OUTSIDE OF 500-YEAR FLOOD PLAIN".

-NO WETLANDS AREAS HAVE BEEN INVESTIGATED BY THIS SURVEY.

-THE LEASED PREMISES IS CONTIGUOUS ALONG ITS COMMON BOUNDARIES TO THE 20' WIDE ACCESS & UTILITY EASEMENT, WHICH IN TURN IS CONTIGUOUS ALONG ITS COMMON BOUNDARIES TO THE HIGHLAND ROAD RIGHT OF WAY, AND THAT THERE ARE NO GAPS, GORES, SPACES, OR OVERLAPS BETWEEN OR AMONG ANY OF SAID PARCELS OF LAND.

SURVEYED FOR:

W-T

W-T COMMUNICATION DESIGN GROUP, LLC
2675 Pratum Avenue
Hoffman Estates, IL 60192
Phone: (224) 293-6333

SURVEYED FOR:

Parallel INFRASTRUCTURE

7411 FULLERTON STREET, SUITE 110
JACKSONVILLE, FL 32256

MERIDIAN SURVEYING, LLC
N8774 Firelane 1
Menasha, WI 54952
Office: 920-993-0881
Fax: 920-273-6037

SITE NAME: CHAPEL HILL RL

SITE NUMBER: ML91104B

SITE ADDRESS:
6131 W. CHAPEL HILL ROAD
MEQUON, WI 53097

PROPERTY OWNER:
JEREMY WEINRICH
6131 W. CHAPEL HILL ROAD
MEQUON, WI 53097

PARCEL NO.:
14-052-01-03-000

ZONED: X

DEED REFERENCE: DOCUMENT NO. 1031056

SURVEY PLAT
FOR
PARALLEL INFRASTRUCTURE

BEING A PART OF THE SE1/4 OF THE SE1/4, SECTION 10, T.9N., R.21E., CITY OF MEQUON, OZAUKEE OUNTY, WISCONSIN

NO.	DATE	DESCRIPTION	BY
2	10-3-16	Added Lease & Easements	J.B.
1	9-23-16	Preliminary Survey	J.D.

DRAWN BY: J.D.	FIELD WORK DATE: 9-22-16
CHECKED BY: C.A.K.	FIELD BOOK: M-37, PG. 48
JOB NO.: 9082	SHEET 1 OF 3

Attachment: packet (2070 : CelluSite, LLC)

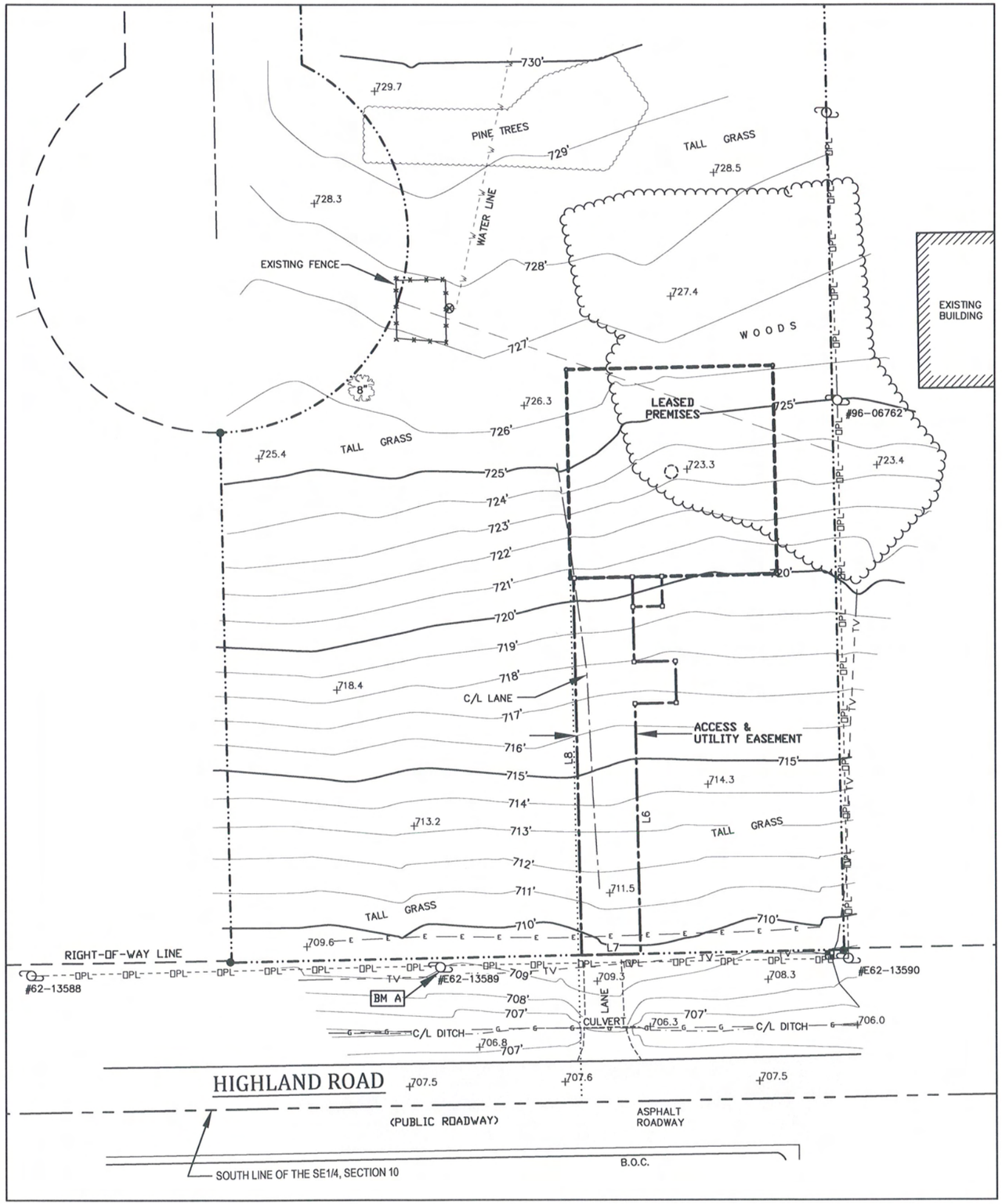

—LEGEND—

- ○ = 1" X 18" IRON PIPE SET
- ● = 1" IRON PIPE FOUND
- ⊗ = WATER VALVE
- ▣ = CABLE BOX
- = EXISTING POWER POLE
- —OPL— = OVERHEAD ELECTRIC
- —G— = BURIED GAS
- —E— = BURIED ELECTRIC
- —W— = WATER LINE
- —·—·— = PROPERTY LINE
- B.O.C. = BACK OF CURB
- = EXISTING TREE

SURVEYOR'S CERTIFICATE

I, Craig A. Keach, Professional Land Surveyor of Meridian Surveying, LLC., certify that under the direction of Parallel Infrastructure, I have surveyed and mapped the proposed area within the specified lands and that the map shown is a true and accurate representation thereof to the best of my knowledge and belief.

Dated this 4th day of OCTOBER, 2016.

Craig A. Keach

WISCONSIN PROFESSIONAL LAND SURVEYOR
Craig A. Keach, S-2333

WISCONSIN
CRAIG A. KEACH
S-2333
NEENAH
WIS.
LAND SURVEYOR

BENCHMARK INFORMATION

SITE BENCHMARK: (BM A)
SET 6" NAIL IN NORTH FACE OF POWER POLE #E62-13589; ±1' ABOVE GROUND LEVEL
ELEVATION: 710.33'

GRAPHIC SCALE
1 inch = 40 ft.
0 20 40 80

BEARINGS REFERENCED TO THE WISCONSIN STATE PLANE COORDINATE SYSTEM (NAD27) – SOUTH ZONE AND THE SOUTH LINE OF THE SE1/4, SECTION 10, T.9N., R.21E., WHICH BEARS: S88°-55'-51"W

N

SURVEYED FOR:

W-T COMMUNICATION DESIGN GROUP,
2675 Pratum Avenue
Hoffman Estates, IL 60192
Phone: (224) 293-6333

SURVEYED FOR:

Parallel INFRASTRUCTURE
7411 FULLERTON STREET, SUITE 110
JACKSONVILLE, FL 32256

MERIDIAN SURVEYING, LLC
N8774 Firelane 1 Office: 920-993-0881
Menasha, WI 54952 Fax: 920-273-6037

SITE NAME: CHAPEL HILL RL

SITE NUMBER: ML91104B

SITE ADDRESS:
6131 W. CHAPEL HILL ROAD
MEQUON, WI 53097

PROPERTY OWNER:
JEREMY WEINRICH
6131 W. CHAPEL HILL ROAD
MEQUON, WI 53097

PARCEL NO.:
14-052-01-03-000

ZONED: X

DEED REFERENCE: DOCUMENT NO. 1031056

SURVEY PLAT
FOR
PARALLEL INFRASTRUCTURE

BEING A PART OF THE SE1/4 OF THE SE1/4, SECTION 10, T.9N., R.21E., CITY OF MEQUON, OZAUKEE COUNTY, WISCONSIN

NO.	DATE	DESCRIPTION	BY
2	10-3-16	Added Lease & Easements	J.B.
1	9-23-16	Preliminary Survey	J.D.

DRAWN BY: J.D.	FIELD WORK DATE: 9-22-16
CHECKED BY: C.A.K.	FIELD BOOK: M-37, PG. 48
JOB NO.: 9082	SHEET 2 OF 3

Attachment: packet (2070 : CelluSite, LLC)

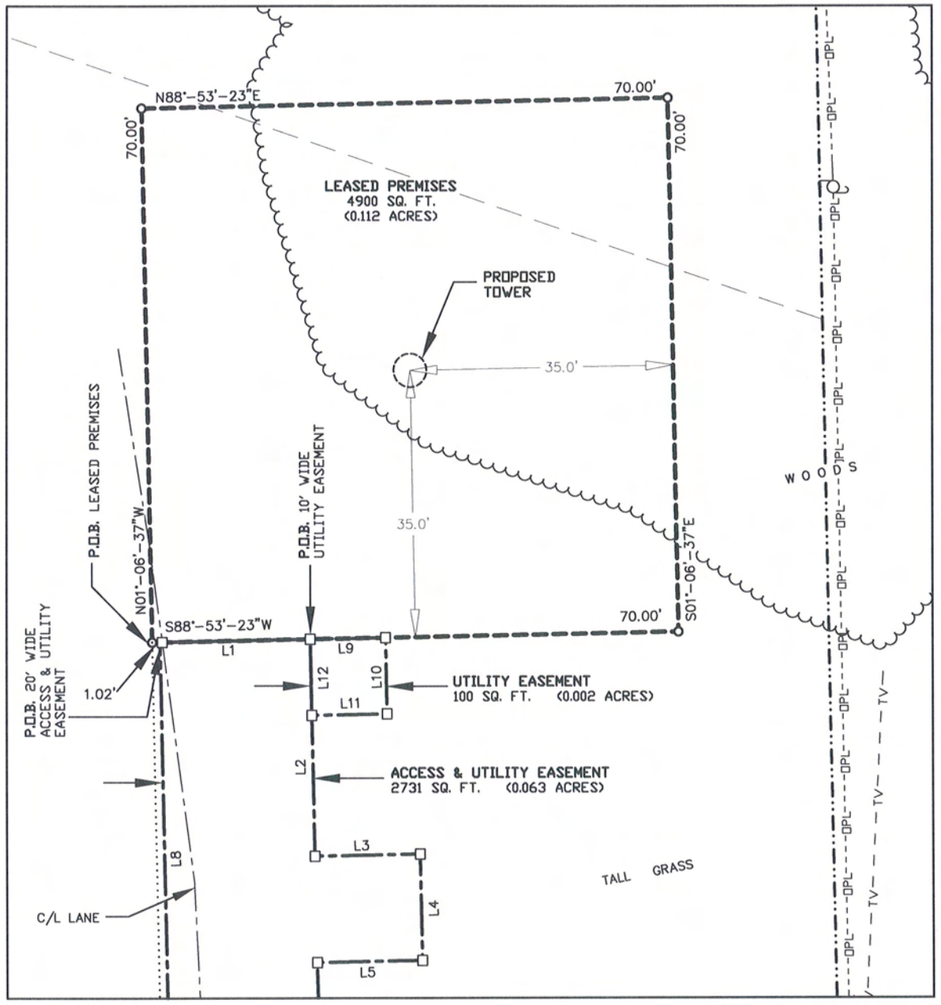

GRAPHIC SCALE
1 inch = 20 ft.
0 10 20 40

LINE TABLE		
Line #	Direction	Length
L1	N88°53'23"E	20.00'
L2	S01°06'37"E	28.50'
L3	N88°53'23"E	14.00'
L4	S01°06'37"E	14.00'
L5	S88°53'23"W	14.00'
L6	S01°06'37"E	84.25'
L7	S88°53'23"W	20.00'
L8	N01°06'37"W	126.75'
L9	N88°53'23"E	10.00'
L10	S01°06'37"E	10.00'
L11	S88°53'23"W	10.00'
L12	N01°06'37"W	10.00'

WISCONSIN
CRAIG A. KEACH
S-2333
NEENAH
WIS.
LAND SURVEYOR

SURVEYOR'S CERTIFICATE

I, Craig A. Keach, Professional Land Surveyor of Meridian Surveying, LLC., certify that under the direction of Parallel Infrastructure, I have surveyed and mapped the proposed area within the specified lands and that the map shown is a true and accurate representation thereof to the best of my knowledge and belief.

Dated this 4th day of OCTOBER, 2016.

Craig A. Keach
WISCONSIN PROFESSIONAL LAND SURVEYOR
Craig A. Keach, S-2333

LEASE PARCEL

A part of Lot Three (3) and Lot Four (4), Block One (1) of the Assessor's Plat No. 4 of Mequon, located in the Southeast Quarter (SE1/4) of the Southeast Quarter (SE1/4) of Section Ten (10), Township Nine (9) North, Range Twenty-One (21) East, City of Mequon, Ozaukee County, Wisconsin containing 4,900 square feet (0.112 acres) of land and being described by:

Commencing at the Southeast Corner of said Section10; thence S88°-55'-51"W 706.13 feet along the south line of the SE1/4 of said Section 10; thence N01°-04'-09"W 176.23 feet to the point of beginning; thence N01°-06'-37"W 70.00 feet; thence N88°-53'-23"E 70.00 feet; thence S01°-06'-37"E 70.00 feet; thence S88°-53'-23"W 70.00 feet to the point of beginning, being subject to any and all easements and restrictions of record.

ACCESS & UTILITY EASEMENT

A part of Lot Four (4), Block One (1) of the Assessor's Plat No. 4 of Mequon, located in the Southeast Quarter (SE1/4) of the Southeast Quarter (SE1/4) of Section Ten (10), Township Nine (9) North, Range Twenty-One (21) East, City of Mequon, Ozaukee County, Wisconsin containing 2,731 square feet (0.063 acres) of land and being described by:

Commencing at the Southeast Corner of said Section10; thence S88°-55'-51"W 706.13 feet along the south line of the SE1/4 of said Section 10; thence N01°-04'-09"W 176.23; thence N88°-53'-23"E 1.02 feet to the point of beginning; thence continue N88°-53'-23"E 20.00 feet; thence S01°-06'-37"E 28.50 feet; thence N88°-53'-23"E 14.00 feet; thence S01°-06'-37"E 14.00 feet; thence S88°-53'-23"W 14.00 feet; thence S01°-06'-37"E 84.25 feet to a point on the north line of Highland Road; thence S88°-53'-23"W 20.00 feet along said north line of Highland Rd; thence N01°-06'-37"W 126.75 feet to the point of beginning, being subject to any and all easements and restrictions of record.

UTILITY EASEMENT

A part of Lot Four (4), Block One (1) of the Assessor's Plat No. 4 of Mequon, located in the Southeast Quarter (SE1/4) of the Southeast Quarter (SE1/4) of Section Ten (10), Township Nine (9) North, Range Twenty-One (21) East, City of Mequon, Ozaukee County, Wisconsin containing 100 square feet (0.002 acres) of land and being described by:

Commencing at the Southeast Corner of said Section10; thence S88°-55'-51"W 706.13 feet along the south line of the SE1/4 of said Section 10; thence N01°-04'-09"W 176.23; thence N88°-53'-23"E 21.02 feet to the point of beginning; thence continue N88°-53'-23"E 10.00 feet; thence S01°-06'-37"E 10.00 feet; thence S88°-53'-23"W 10.00 feet; thence N01°-06'-37"W 10.00 feet to the point of beginning, being subject to any and all easements and restrictions of record.

—LEGEND—

- ○ = 1" X 18" IRON PIPE SET
- ● = 1" IRON PIPE FOUND
- ⊗ = WATER VALVE
- ▣ = CABLE BOX
- = EXISTING POWER POLE
- —OPL— = OVERHEAD ELECTRIC
- —G— = BURIED GAS
- —E— = BURIED ELECTRIC
- —W— = WATER LINE
- —··— = PROPERTY LINE
- B.O.C. = BACK OF CURB
- = EXISTING TREE

BEARINGS REFERENCED TO THE WISCONSIN STATE PLANE COORDINATE SYSTEM (NAD27) SOUTH ZONE AND THE SOUTH LINE OF THE SE1/4, SECTION 10, T.9N., R.21E., WHICH BEARS: S88-55-51"W

N

SURVEYED FOR:

W-T COMMUNICATION DESIGN GROUP, LLC
2675 Pratum Avenue
Hoffman Estates, IL 60192
Phone: (224) 293-6333

SURVEYED FOR:

Parallel INFRASTRUCTURE
7411 FULLERTON STREET, SUITE 110
JACKSONVILLE, FL 32256

MERIDIAN SURVEYING, LLC
N8774 Firelane 1
Menasha, WI 54952
Office: 920-993-0881
Fax: 920-273-6037

SITE NAME: CHAPEL HILL RL

SITE NUMBER: ML91104B

SITE ADDRESS:
6131 W. CHAPEL HILL ROAD
MEQUON, WI 53097

PROPERTY OWNER:
JEREMY WEINRICH
6131 W. CHAPEL HILL ROAD
MEQUON, WI 53097

PARCEL NO.:
14-052-01-03-000

ZONED: X

DEED REFERENCE: DOCUMENT NO. 1031056

SURVEY PLAT
FOR
PARALLEL INFRASTRUCTURE

BEING A PART OF THE SE1/4 OF THE SE1/4, SECTION 10, T.9N., R.21E., CITY OF MEQUON, OZAUKEE COUNTY, WISCONSIN

NO.	DATE	DESCRIPTION	BY
2	10-3-16	Added Lease & Easements	J.B.
1	9-23-16	Preliminary Survey	J.D.

DRAWN BY: J.D.	FIELD WORK DATE: 9-22-16
CHECKED BY: C.A.K.	FIELD BOOK: M-37, PG. 48
JOB NO.: 9082	SHEET 3 OF 3

Attachment: packet (2070 : CelluSite, LLC)

Attachment: packet (2070 : CelluSite, LLC)

IMPORTANT SITE NOTES:

1. CONTRACTOR WILL NOT START CONSTRUCTION UNTIL AFTER THEY HAVE RECEIVED THE PRE-CON PACKAGE AND HAVE A PRE-CON WALK WITH THE PROJECT MANAGER.
2. CONTRACTOR TO HIRE PUBLIC (811) AND PRIVATE LOCATING SERVICE IN ORDER TO LOCATE AND PROTECT ALL SURFACE UTILITIES. DO NOT SCALE OFF THESE PLANS FOR ANY BELOW GRADE UTILITIES
3. CONTRACTOR SHALL VERIFY ALL EXISTING BURIED AND OVERHEAD UTILITIES PRIOR TO EXCAVATION. CONTRACTOR SHALL REPAIR ALL DAMAGED UTILITIES AT HIS OWN COST AND COORDINATE ANY REPAIRS WITH RESPECTIVE UTILITY COMPANY.
4. CONTRACTOR TO VERIFY ALL HEIGHTS AND AZIMUTHS IN FIELD PRIOR TO CONSTRUCTION. CONTRACTOR SHALL NOTIFY T-MOBILE AND ENGINEERING FIRM OF ANY DISCREPANCIES BEFORE PROCEEDING.
5. CONTRACTOR SHALL RESTORE AND REPAIR ANY DAMAGED AREAS CAUSED BY CONSTRUCTION TO ORIGINAL OR BETTER CONDITION

NOTE:
THE SURVEY FOR THIS SITE IS PENDING. ALL PARCEL/PROPERTY LINES SHOWN ARE APPROXIMATE LOCATIONS.

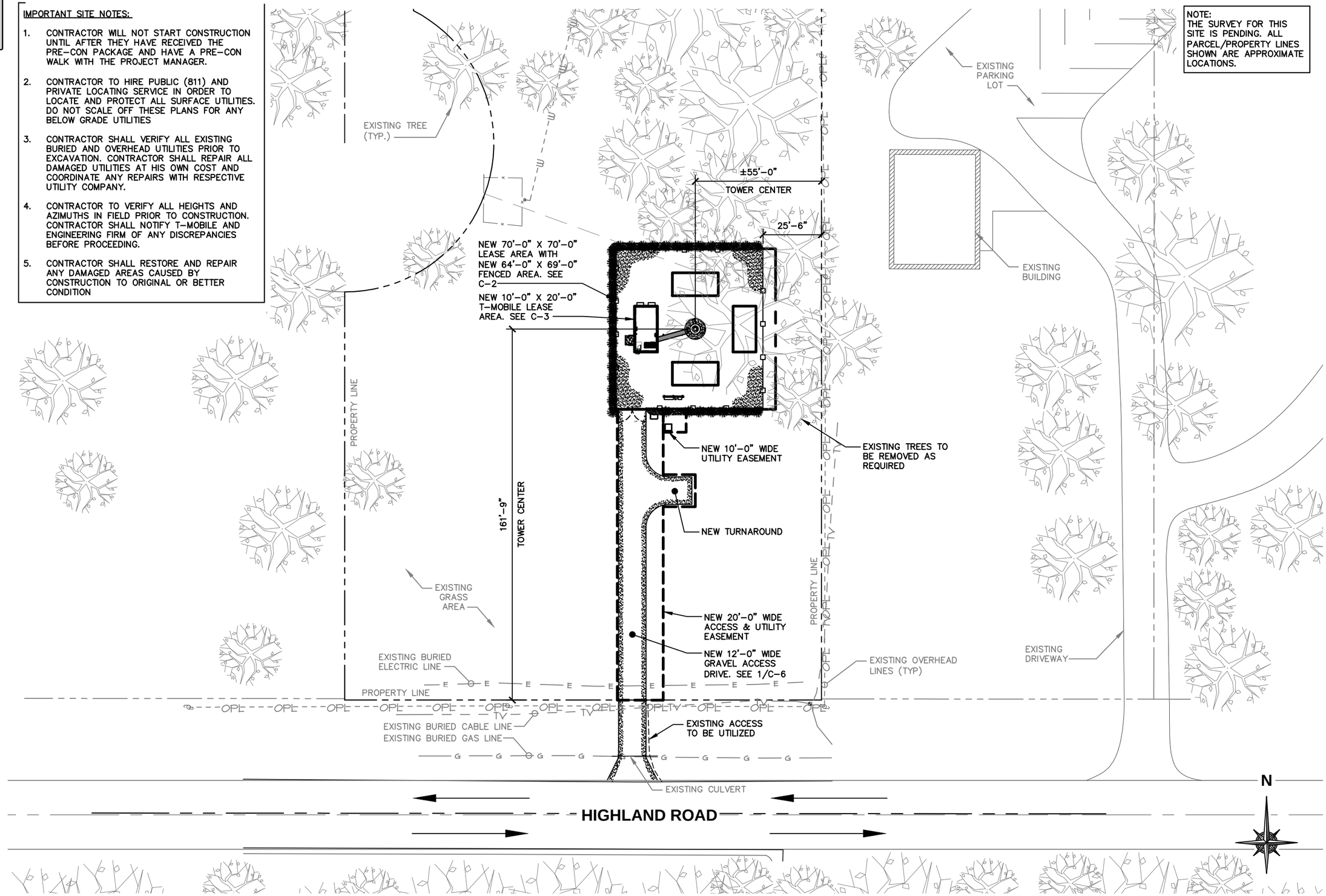

OVERALL SITE PLAN

SCALE: 1" = 40'-0"

1

Parallel INFRASTRUCTURE

T-Mobile stick together

8550 BRYN MAWR AVENUE, SUITE 100
CHICAGO, ILLINOIS 60631

CelluSite, LLC

PLANS PREPARED BY:

W-T COMMUNICATION DESIGN GROUP, LLC.
WIRELESS INFRASTRUCTURE
2675 Pratum Avenue
Hoffman Estates, Illinois 60192
PH: (224) 293-6333 FAX: (224) 293-6444
www.wtengineering.com

COPYRIGHT © 2017 W-T COMMUNICATION DESIGN GROUP, LLC.

A&E LICENSE:

JEFFERY GUTOWSKY
PROFESSIONAL ENGINEER
STATE OF WISCONSIN
LICENSE # 0035509-006
EXPIRES: 07/31/2018 SIGNED: / /

REVISIONS:

DATE	DESCRIPTION	BY	REV
08/01/16	FOR CLIENT REVIEW	ATK	A
10/11/16	REVISIONS	RSM	B
01/03/17	REVISIONS	RSM	C
01/04/17	REVISIONS	RSM	D

SITE INFORMATION:

ML91104B

CHAPEL HILL RL

6131 W. CHAPEL HILL ROAD
MEQUON, WI 53097
OZAUKEE COUNTY

W-T PROJECT NUMBER:

T1601045

SHEET TITLE:

OVERALL SITE PLAN

SHEET NUMBER:

C-1

Attachment: packet (2070 : CellusSite, LLC)

NOTE:
CONTRACTOR SHALL RESTORE AND REPAIR ANY DAMAGED AREAS CAUSED BY CONSTRUCTION TO ORIGINAL OR BETTER CONDITION.

NOTE:
ROUTE COAX UP TOWER PER TOWER DESIGN DRAWING BY TOWER OWNER.

NOTE:
EXISTING TREES NOT SHOWN FOR CLARITY

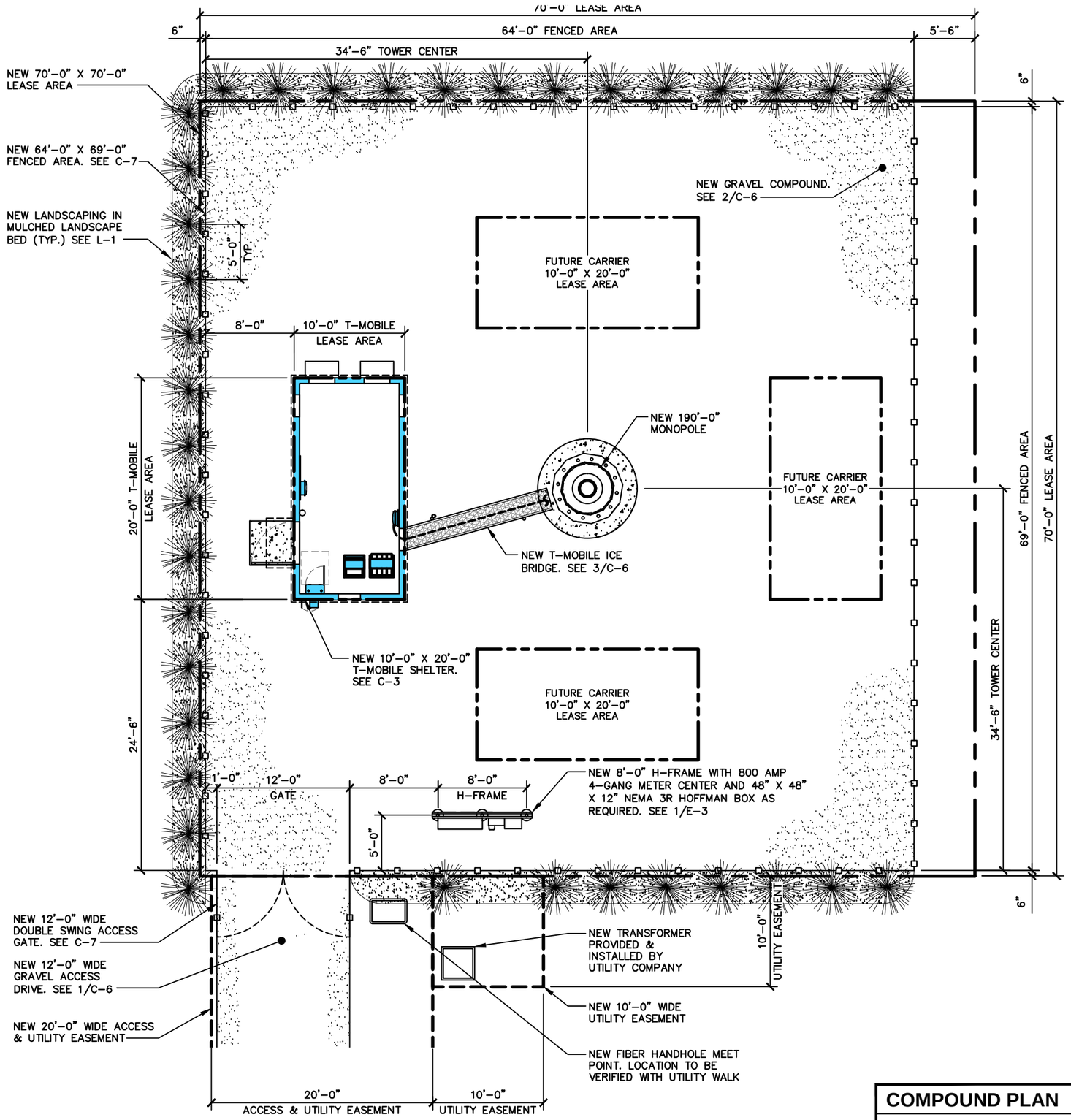

COMPOUND PLAN

SCALE: 1" = 10'-0"

1

Parallel INFRASTRUCTURE

T-Mobile stick together

8550 BRYN MAWR AVENUE, SUITE 100
CHICAGO, ILLINOIS 60631

CelluSite, LLC

PLANS PREPARED BY:

W-T COMMUNICATION DESIGN GROUP, LLC.
WIRELESS INFRASTRUCTURE
2675 Pratum Avenue
Hoffman Estates, Illinois 60192
PH: (224) 293-6333 FAX: (224) 293-6444
www.wtengineering.com

COPYRIGHT © 2017 W-T COMMUNICATION DESIGN GROUP, LLC.

A&E LICENSE:

JEFFERY GUTOWSKY
PROFESSIONAL ENGINEER
STATE OF WISCONSIN
LICENSE # 0035509-006
EXPIRES: 07/31/2018 SIGNED: / /

REVISIONS:

DATE	DESCRIPTION	BY	REV
08/01/16	FOR CLIENT REVIEW	ATK	A
10/11/16	REVISIONS	RSM	B
01/03/17	REVISIONS	RSM	C
01/04/17	REVISIONS	RSM	D

SITE INFORMATION:

ML91104B

CHAPEL HILL RL

6131 W. CHAPEL HILL ROAD
MEQUON, WI 53097
OZAUKEE COUNTY

W-T PROJECT NUMBER:

T1601045

SHEET TITLE:

COMPOUND PLAN

SHEET NUMBER:

C-2

Attachment: packet (2070 : CellusIte, LLC)

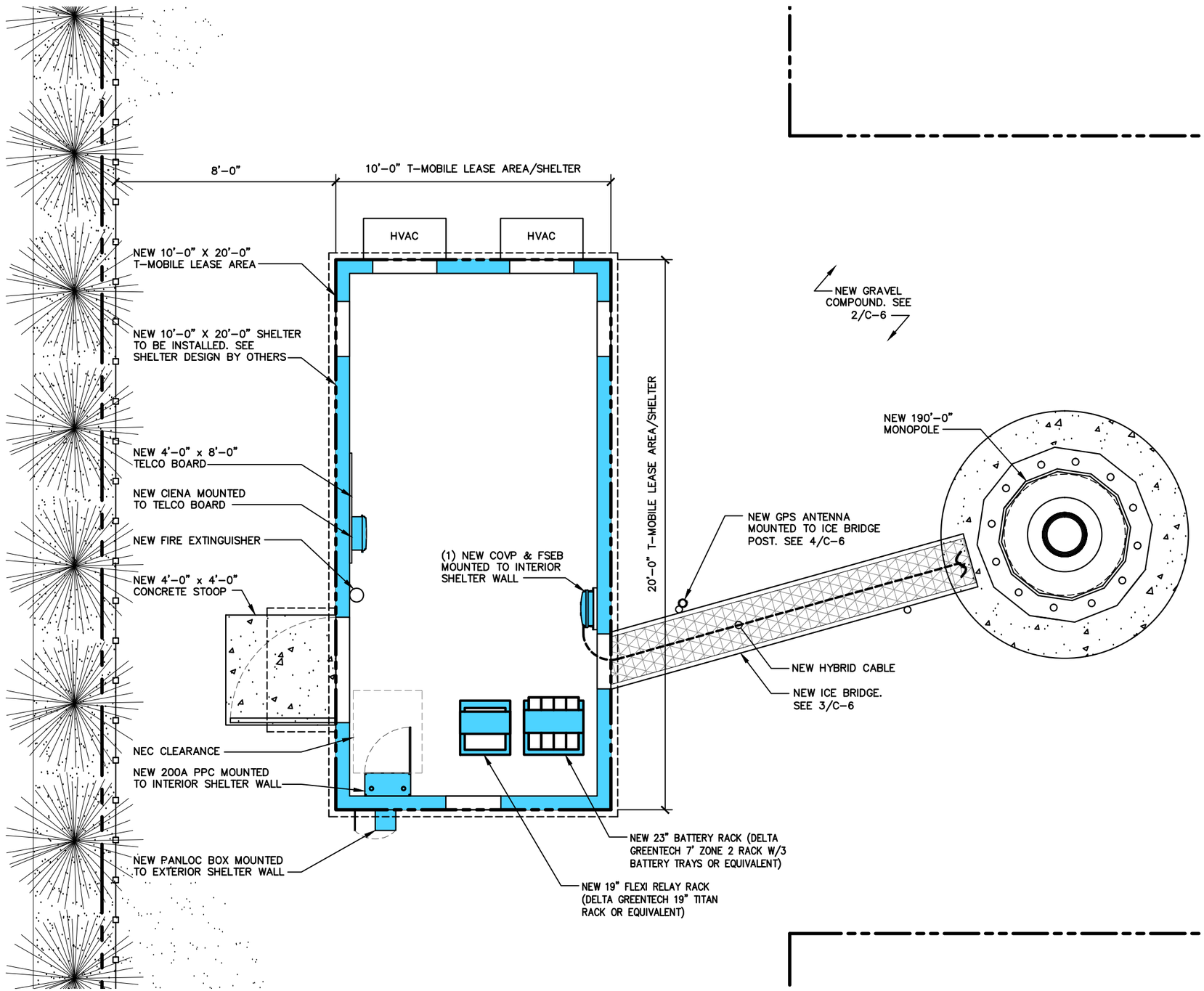

NOTE:
CONTRACTOR SHALL RESTORE AND REPAIR ANY DAMAGED AREAS CAUSED BY CONSTRUCTION TO ORIGINAL OR BETTER CONDITION.

NOTE:
ROUTE COAX UP TOWER PER TOWER DESIGN DRAWING BY TOWER OWNER.

NOTE:
EXISTING TREES NOT SHOWN FOR CLARITY

N

ENLARGED SITE PLAN

SCALE: 1/4" = 1'-0"

1

Parallel INFRASTRUCTURE

T-Mobile
stick together
8550 BRYN MAWR AVENUE, SUITE 100
CHICAGO, ILLINOIS 60631

CelluSite, LLC

PLANS PREPARED BY:

W-T COMMUNICATION DESIGN GROUP, LLC.
WIRELESS INFRASTRUCTURE
2675 Pratum Avenue
Hoffman Estates, Illinois 60192
PH: (224) 293-6333 FAX: (224) 293-6444
www.wtengineering.com

COPYRIGHT © 2017 W-T COMMUNICATION DESIGN GROUP, LLC.

A&E LICENSE:

JEFFERY GUTOWSKY
PROFESSIONAL ENGINEER
STATE OF WISCONSIN
LICENSE # 0035509-006
EXPIRES: 07/31/2018 SIGNED: / /

REVISIONS:

DATE	DESCRIPTION	BY	REV
08/01/16	FOR CLIENT REVIEW	ATK	A
10/11/16	REVISIONS	RSM	B
01/03/17	REVISIONS	RSM	C
01/04/17	REVISIONS	RSM	D

SITE INFORMATION:

ML91104B
CHAPEL HILL RL
6131 W. CHAPEL HILL ROAD
MEQUON, WI 53097
OZAUKEE COUNTY

W-T PROJECT NUMBER:
T1601045

SHEET TITLE:
ENLARGED SITE PLAN

SHEET NUMBER:
C-3

Attachment: packet (2070 : CellusIte, LLC)

LEGEND:

XXX	PROPOSED CONTOUR	LF	LINEAR FEET
XXX.XX	PROPOSED ELEVATION		FLOW DIRECTION
T/F= XXX.XX	TOP OF FOUNDATION		PROPOSED CMP (CORRUGATED METAL PIPE)
XXX.XX	INVERT/INLET		CENTER OF SWALE
XXX.XX	PROPOSED SPOT GRADE		PROPOSED CONTOUR

NOTE:
1. PARALLEL SHALL COORDINATE WITH THE PROPERTY OWNER TO OBTAIN THE PROPER EASEMENT AGREEMENTS TO CONSTRUCT AND MAINTAIN EQUIPMENT IN AND AROUND THE TOWER COMPOUND.
2. PROPOSED COMPOUND LAYOUT BASED ON SURVEY PROVIDED BY MERIDIAN SURVEYING, 10/4/16.

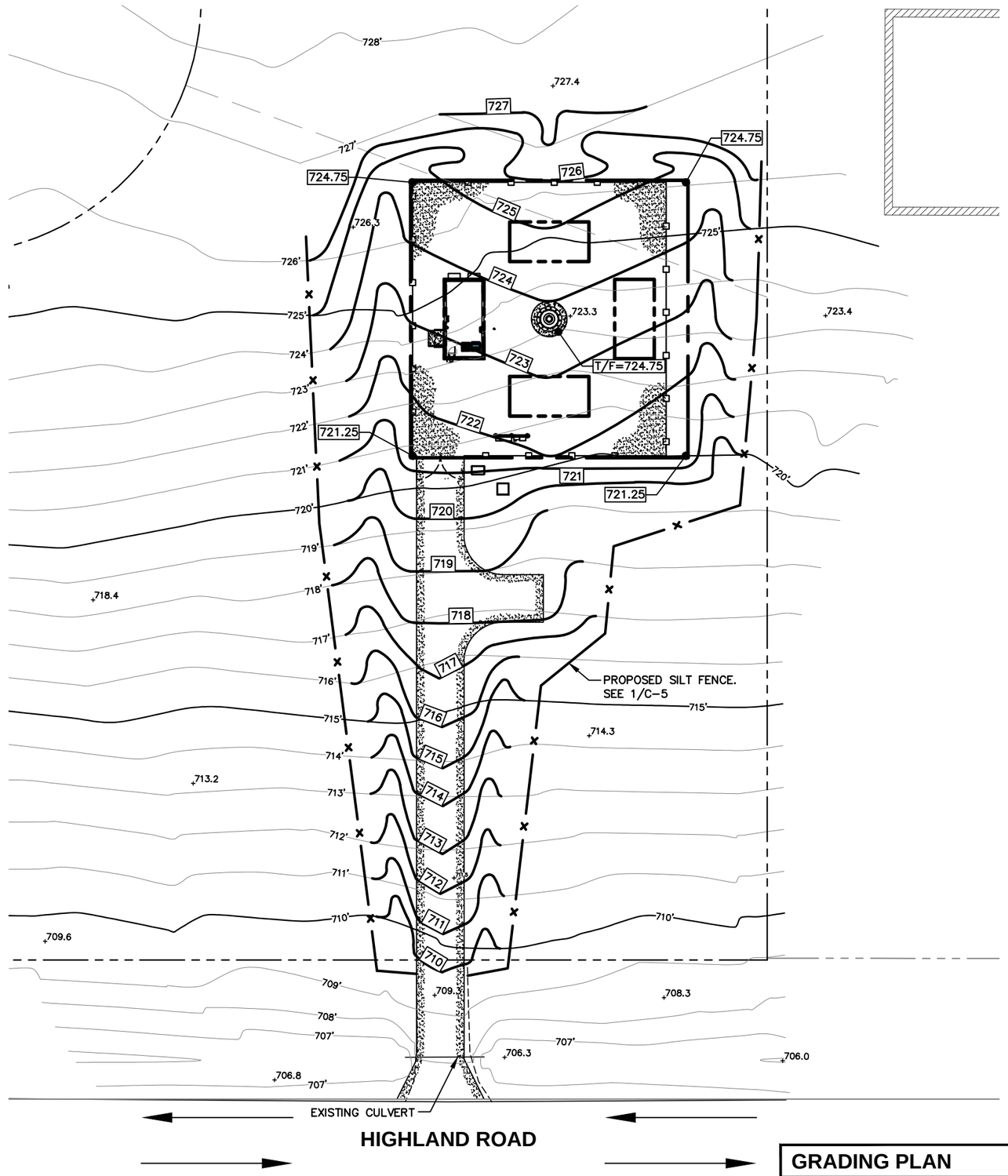

GRADING PLAN

SCALE: 1" = 30'-0"

1

Parallel INFRASTRUCTURE

T-Mobile stick together
8550 BRYN MAWR AVENUE, SUITE 100
CHICAGO, ILLINOIS 60631

CelluSite, LLC

PLANS PREPARED BY:
W-T COMMUNICATION DESIGN GROUP, LLC.
WIRELESS INFRASTRUCTURE
2675 Pratum Avenue
Hoffman Estates, Illinois 60192
PH: (224) 293-6333 FAX: (224) 293-6444
www.wtengineering.com

COPYRIGHT © 2017 W-T COMMUNICATION DESIGN GROUP, LLC.

A&E LICENSE:

JEFFERY GUTOWSKY
PROFESSIONAL ENGINEER
STATE OF WISCONSIN
LICENSE # 0035509-006
EXPIRES: 07/31/2018 SIGNED: / /

REVISIONS:

DATE	DESCRIPTION	BY	REV
08/01/16	FOR CLIENT REVIEW	ATK	A
10/11/16	REVISIONS	RSM	B
01/03/17	REVISIONS	RSM	C
01/04/17	REVISIONS	RSM	D

SITE INFORMATION:

ML91104B

CHAPEL HILL RL

6131 W. CHAPEL HILL ROAD
MEQUON, WI 53097
OZAUKEE COUNTY

W-T PROJECT NUMBER:

T1601045

SHEET TITLE:

GRADING PLAN

SHEET NUMBER:

C-4

Attachment: packet (2070 : CelluSite, LLC)

SILT FENCE NOTES:

CONSTRUCT THE SILT FENCE OF FILTER CLOTH WITH A MINIMUM TENSILE STRENGTH OF 50 LB/LIN INCH.

1. SILT FENCE HEIGHT SHALL BE A MINIMUM OF 15 INCHES ABOVE GROUND HEIGHT, BUT SHALL NOT EXCEED 18 INCHES.
2. CONSTRUCT SILT FENCE OF A CONTINUOUS ROLL CUT THE LENGTH OF THE BARRIER TO AVOID JOINTS. FABRIC TO BE FASTENED SECURELY TO FENCE POSTS WITH 1 INCH STAPLES OR TIE WIRES.
3. SUPPORT FABRIC WITH WOVEN WIRE MESH 14.5 GAUGE, 6" MAX. MESH OPENING. WOVEN WIRE FENCE TO BE FASTENED SECURELY TO FENCE POSTS WITH 1 INCH STAPLES OR TIE WIRES.
4. POSTS FOR SEDIMENT FENCES SHALL BE 4 INCH DIAMETER PINE, 2 INCH DIAMETER OAK OR 1.33 LB/LINEAR FOOT STEEL. MINIMUM LENGTH SHALL BE 4 FEET. POSTS SHALL BE SPACED NO MORE THAN 8 FEET APART AND THEY SHALL BE DRIVEN INTO THE GROUND A MINIMUM OF 18 INCHES
5. EXCAVATE A TRENCH APPROXIMATELY 6 INCHES WIDE AND 8 INCHES DEEP ALONG THE PROPOSED LINE OF POSTS AND UP SLOPE FROM THE BARRIER. BACKFILL THE TRENCH WITH COMPACTED SOIL OR GRAVEL PLACED OVER THE FILTER FABRIC.
6. DO NOT ATTACH FILTER FABRIC TO EXISTING FENCES, TREES, ETC.
7. REMOVE FENCING FOLLOWING STABILIZATION OF SLOPES AND ALL DISTURBED AREAS.

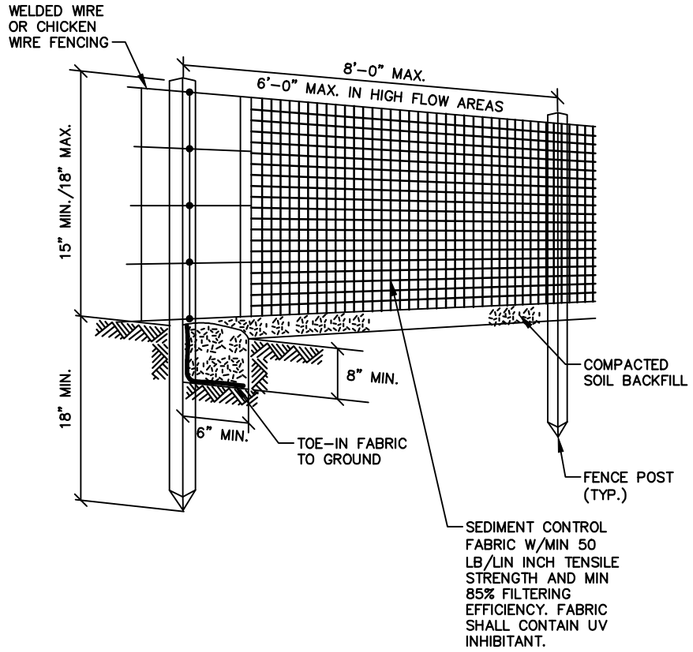

SILT FENCE DETAIL

SCALE: NONE

1

NOT USED

SCALE: NONE

2

NOT USED

SCALE: NONE

3

NOT USED

SCALE: NONE

4

Parallel INFRASTRUCTURE

T-Mobile stick together

8550 BRYN MAWR AVENUE,
SUITE 100
CHICAGO, ILLINOIS 60631

CelluSite, LLC

PLANS PREPARED BY:

W-T COMMUNICATION DESIGN GROUP, LLC.
WIRELESS INFRASTRUCTURE
2675 Pratum Avenue
Hoffman Estates, Illinois 60192
PH: (224) 293-6333 FAX: (224) 293-6444
www.wtengineering.com

COPYRIGHT © 2017 W-T COMMUNICATION DESIGN GROUP, LLC.

A&E LICENSE:

JEFFERY GUTOWSKY
PROFESSIONAL ENGINEER
STATE OF WISCONSIN
LICENSE # 0035509-006
EXPIRES: 07/31/2018 SIGNED: / /

REVISIONS:

DATE	DESCRIPTION	BY	REV
08/01/16	FOR CLIENT REVIEW	ATK	A
10/11/16	REVISIONS	RSM	B
01/03/17	REVISIONS	RSM	C
01/04/17	REVISIONS	RSM	D

SITE INFORMATION:

ML91104B

CHAPEL HILL RL

6131 W. CHAPEL HILL ROAD
MEQUON, WI 53097
OZAUKEE COUNTY

W-T PROJECT NUMBER:

T1601045

SHEET TITLE:

GRADING DETAILS

SHEET NUMBER:

C-5

Attachment: packet (2070 : CellusSite, LLC)

NOTE:
ALL SELECT GRANULAR FILL SHALL BE COMPACTED TO A 95% COMPACTION AT A MAXIMUM DRY DENSITY AS DETERMINED BY ASTM D-1557 OR WITHIN PLUS OR MINUS 3% OF OPTIMUM MOISTURE CONTENT.

NOTE:
CONTRACTOR SHALL BE RESPONSIBLE FOR CLEARING & GRUBBING THE CONSTRUCTION SITE AND ROADWAY AREAS WHERE APPLICABLE.

INSTALLATION PROCEDURE:
1. EXCAVATE TO 10" BELOW GRADE AND INSTALL 8" OF 1"-3" BREAKER ROCK AND ROLL WITH A 3-TON ASPHALT ROLLER
2. INSTALL 2" OF GRADE 9/CA-6 AND ROLL WITH VIBRATORY ROLLER AT TIME OF TOWER DELIVERY
3. INSTALL AN ADDITIONAL 2" OF GRADE 9/CA-6 AND ROLL WITH VIBRATORY ROLLER

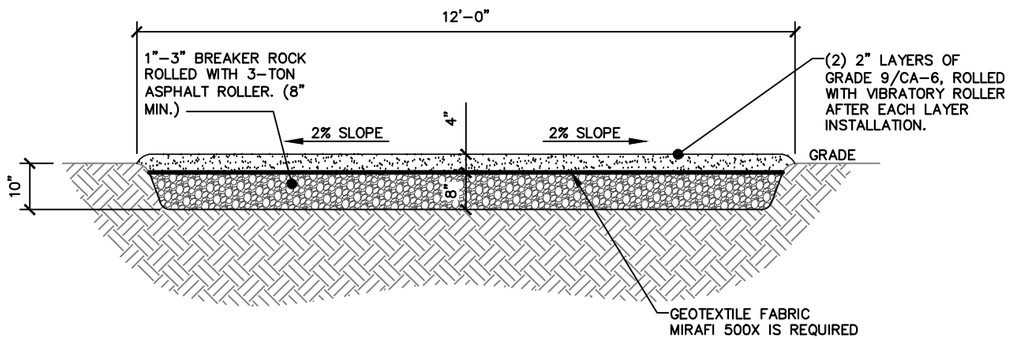

GRAVEL DRIVE DETAIL

SCALE: NONE

1

NOTE:
WEED CONTROL FABRIC SHALL BE USED UNDER ALL AREAS OF THE YARD.

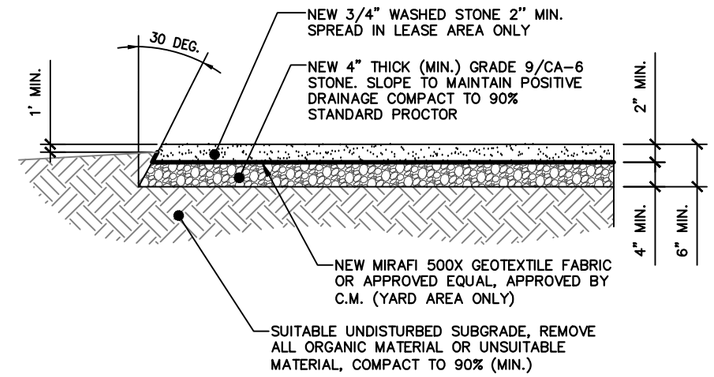

GRAVEL COMPOUND DETAIL

SCALE: NONE

2

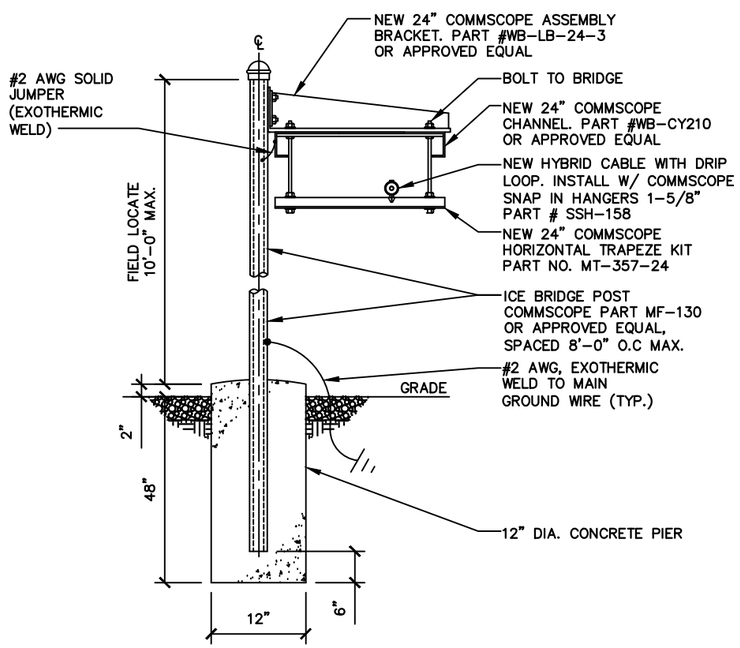

ICE BRIDGE DETAIL

SCALE: NONE

3

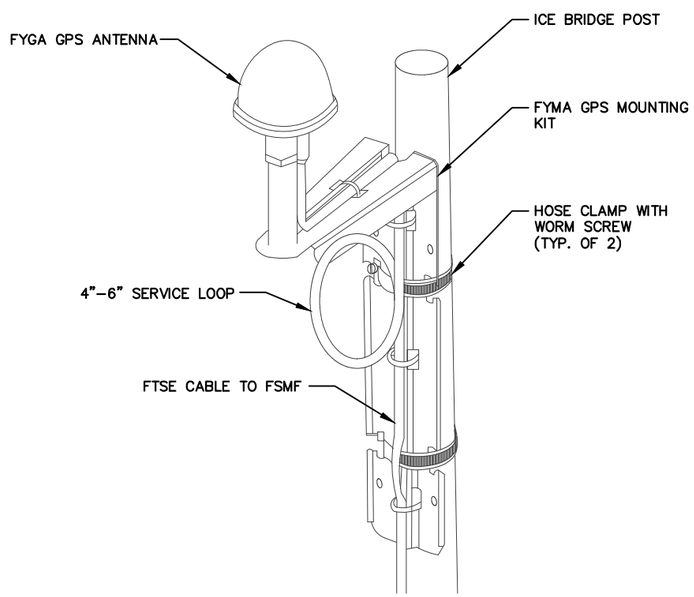

FYGA GPS ANTENNA DETAIL

SCALE: NONE

4

NOT USED

SCALE: NONE

5

Parallel INFRASTRUCTURE

T-Mobile stick together

8550 BRYN MAWR AVENUE, SUITE 100
CHICAGO, ILLINOIS 60631

CelluSite, LLC

PLANS PREPARED BY:

W-T COMMUNICATION DESIGN GROUP, LLC.
WIRELESS INFRASTRUCTURE
2675 Pratum Avenue
Hoffman Estates, Illinois 60192
PH: (224) 293-6333 FAX: (224) 293-6444
www.wtengineering.com

COPYRIGHT © 2017 W-T COMMUNICATION DESIGN GROUP, LLC.

A&E LICENSE:

JEFFERY GUTOWSKY
PROFESSIONAL ENGINEER
STATE OF WISCONSIN
LICENSE # 0035509-006
EXPIRES: 07/31/2018 SIGNED: / /

REVISIONS:

DATE	DESCRIPTION	BY	REV
08/01/16	FOR CLIENT REVIEW	ATK	A
10/11/16	REVISIONS	RSM	B
01/03/17	REVISIONS	RSM	C
01/04/17	REVISIONS	RSM	D

SITE INFORMATION:

ML91104B
CHAPEL HILL RL
6131 W. CHAPEL HILL ROAD
MEQUON, WI 53097
OZAUKEE COUNTY

W-T PROJECT NUMBER:

T1601045

SHEET TITLE:

ICE BRIDGE, GPS, & SITE DETAILS

SHEET NUMBER:

C-6

Attachment: packet (2070 : CellusSite, LLC)

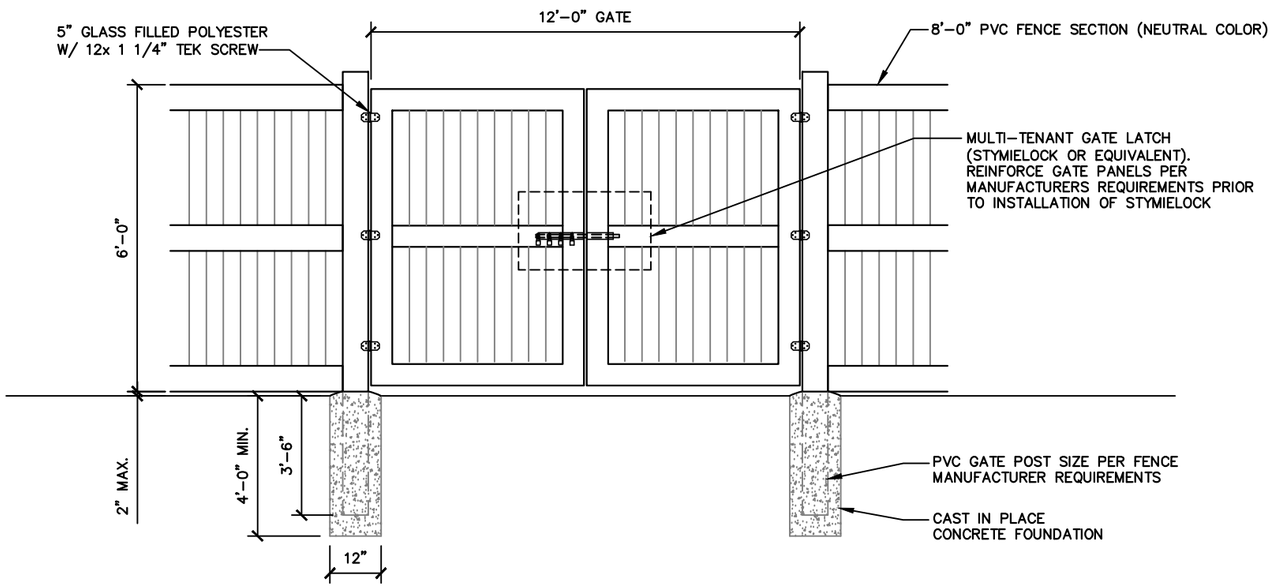

FENCE ELEVATION

SCALE: NONE

1

NOTES:

1. GENERAL CONTRACTOR TO ENSURE NEW PVC FENCE IS NEUTRAL IN COLOR
2. FOR ALL PVC FENCE HARDWARE & INSTALLATION SPECIFICATIONS CONSULT WWW.FENCEWHOLESALE.COM, PHONE: 1-866-525-9288 OR 717-554-5713.

DETAIL NOT USED

SCALE: NONE

2

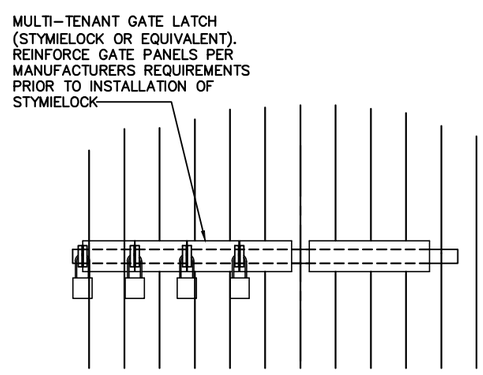

MULTI-TENANT LOCK

SCALE: NONE

3

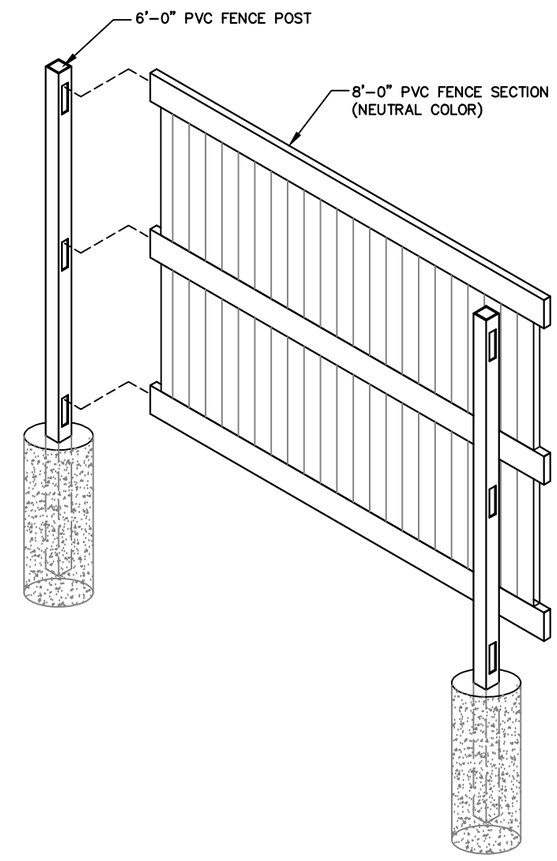

FENCE SECTION DETAIL

SCALE: NONE

4

Parallel INFRASTRUCTURE

T-Mobile stick together

8550 BRYN MAWR AVENUE,
SUITE 100
CHICAGO, ILLINOIS 60631

CelluSite, LLC

PLANS PREPARED BY:

W-T COMMUNICATION DESIGN GROUP, LLC.
WIRELESS INFRASTRUCTURE
2675 Pratum Avenue
Hoffman Estates, Illinois 60192
PH: (224) 293-6333 FAX: (224) 293-6444
www.wtengineering.com

COPYRIGHT © 2017 W-T COMMUNICATION DESIGN GROUP, LLC.

A&E LICENSE:

JEFFERY GUTOWSKY
PROFESSIONAL ENGINEER
STATE OF WISCONSIN
LICENSE # 0035509-006
EXPIRES: 07/31/2018 SIGNED: / /

REVISIONS:

DATE	DESCRIPTION	BY	REV
08/01/16	FOR CLIENT REVIEW	ATK	A
10/11/16	REVISIONS	RSM	B
01/03/17	REVISIONS	RSM	C
01/04/17	REVISIONS	RSM	D

SITE INFORMATION:

ML91104B

CHAPEL HILL RL

6131 W. CHAPEL HILL ROAD
MEQUON, WI 53097
OZAUKEE COUNTY

W-T PROJECT NUMBER:

T1601045

SHEET TITLE:

FENCE DETAILS

SHEET NUMBER:

C-7

Attachment: packet (2070 : CellusSite, LLC)

ALL PLACEMENT OF LANDSCAPING SHALL MEET THE FOLLOWING CONDITIONS:

1. ALL PLANT MATERIAL SHALL BE PLANTED IN A MANNER WHICH IS NOT TO INTERFERE WITH OVERHEAD WIRES OR BE INTRUSIVE TO UTILITIES OR PAVEMENT.
2. NO TREES OR OTHER LANDSCAPING SHALL BE LOCATED CLOSER THAN 10 FEET TO A FIRE HYDRANT OR OTHER ABOVE GROUND UTILITIES.
3. NO LANDSCAPING SHALL INTERFERE WITH SITE REQUIREMENTS FOR SAFE INGRESS AND EGRESS.

INSTALLATION STANDARDS:

1. PLANT MATERIAL SHALL CONFORM WITH THE CURRENT AMERICAN STANDARDS FOR NURSERY STOCK, PUBLISHED BY THE AMERICAN ASSOCIATION OF NURSERYMEN FOR THAT TYPE OF TREE OR SHRUB AT THE TIME OF INSTALLATION.
2. ALL TREES SHALL BE GROWN IN A NURSERY LOCATED IN THE STATE OF ILLINOIS.
3. ALL PLANT MATERIAL SHALL BE INSTALLED FREE OF DISEASE AND IN A MANNER THAT ENSURES THE AVAILABILITY OF SUFFICIENT SOIL AND WATER TO SUSTAIN HEALTHY GROWTH.
4. ALL TAGS, WIRES, PLASTIC TIES AND ROPE SHALL BE CUT FROM EACH TREE TO PREVENT GIRDLING OF THE TREE. THE BURLAP SHALL BE PULLED BACK FROM THE UPPER THIRD OF THE ROOTBALL. IF A PLASTIC 'BURLAP' IS USED, IT SHALL BE REMOVED IN ITS ENTIRETY FROM THE ROOTBALL.
5. ALL PLANT MATERIAL SHALL BE PLANTED WITH A MINIMUM OF DEPTH OF THREE (3) INCHES OF MULCHED MATERIAL AND A DIAMETER OF THREE (3) FEET AROUND THE BASE OF THE TREE.
6. TREES SHALL BE STAKED WITH POSTS AND NOT STAKES IN AREAS OF HIGH WIND FOR ONE TO THREE YEARS TO ALLOW THE GROWTH OF PROPOSED ROOTS TO STABILIZE. ALL ROPES SHALL BE COVERED TO PREVENT CUTTING INTO THE BARK.
7. ANY EXCESS SOIL, CLAY, OR CONSTRUCTION DEBRIS SHALL BE REMOVED FROM THE PLANTING SITE, PRIOR TO PLANTING OF INDIVIDUAL TREES AT FINAL GRADE.
8. THE JURISDICTION, AT ITS DISCRETION, HAS THE RIGHT TO RETAIN A PROFESSIONAL LANDSCAPE ARCHITECT OR ARBORIST TO REVIEW SUBMITTED LANDSCAPE PLAN AND THE PROFESSIONAL LANDSCAPE ARCHITECT OR ARBORIST WILL SUBMIT A WRITTEN REPORT TO THE PLANNING AND ZONING COMMISSION. ALL EXPENSES INCURRED BY THE JURISDICTION FOR THE USE OF THE LANDSCAPE ARCHITECT OR ARBORIST SHALL BE REIMBURSED BY THE DEVELOPER.

PLANTING SEASONS:

1. PLANTS MUST BE PLANTED DURING THE FOLLOWING DATES: APRIL 1ST TO MAY 15TH AND SEPTEMBER 1ST TO OCTOBER 1ST.
2. THE PLANTING PERIODS INDICATED MAY BE EXTENDED DUE TO WEATHER CONDITIONS OR OTHER FACTORS, WHICH MUST BE APPROVED BY THE LANDSCAPE ARCHITECT/ENGINEER.
3. THE CONTRACTOR WILL BE RELIEVED FOR HIS GUARANTEE RESPONSIBILITY SHOULD THE OWNER REQUIRE PLANT MATERIAL INSTALLATIONS TO BE COMPLETED DURING OTHER TIMES THAN THE PLANTING PERIODS INDICATED.

PLANTING:

1. ALL SHADE TREES, ORNAMENTAL TREES, EVERGREEN TREES AND SHRUBS SHALL BE PLANTED IN HOLES EXCAVATED AT LEAST 3x THE WIDTH OF THE DIAMETER OF THE BALL OR CONTAINER AND DEEP ENOUGH SO THAT THE TOP OF THE BALL OR SOIL IN THE CONTAINER IS AT OR JUST ABOVE EXISTING GRADE.
2. ALL TWINE OR ROPE MUST BE CUT AND REMOVED AND THE BURLAP FOLDED AWAY FROM THE TOP OF THE BALL. THE EXCAVATION MUST BE BACKFILLED WITH THE PLANTING MIXTURE AND WATERED. ANY SETTLEMENT WILL BE FILLED WITH PLANTING MIXTURE.
3. A 4" DEEP SAUCER, SIMILAR TO THE DIAMETER OF THE PLANTING HOLE SHALL BE CREATED USING PLANTING MIX.
4. PLANTING MIX TO CONSIST OF 1/3 TOP SOIL, 1/3 SOIL FROM EXCAVATION, AND 1/3 MUSHROOM COMPOST (OR 1/3 PEAT MOSS).

CLEAN UP:

1. ALL DEBRIS GENERATED DURING THE INSTALLATION OF PLANT MATERIALS MUST BE REMOVED FROM THE SITE.
2. ALL PAVEMENTS AND WALKS MUST BE SWEPT AFTER EACH DAYS WORK. UPON COMPLETION OF THE WORK, ALL PAVEMENTS MUST BE WASHED TO REMOVE ALL MUD OR DIRT.

NOTES

SCALE: NONE

1

LANDSCAPE CHART

QTY.	COMMON NAME	SCIENTIFIC NAME	HT. AT INSTALL	SPACING	ROOTBALL	OVERALL PROJECTED HEIGHT
36	MISSION ARBORVITAE	thuja occidentalis 'mission'	6'-0"	3'-0" O.C. MIN	B/B	10'-0"

NOTE:
LAND OWNER WILL BE RESPONSIBLE FOR MAINTAINING AND WATERING ALL LANDSCAPING ON SITE.

NOTE:
ALL MATERIALS SURROUNDING THE TREE ROOT BALL, INCLUDING WIRING, ARE TO BE REMOVED PRIOR TO PLANTING OF TREES.

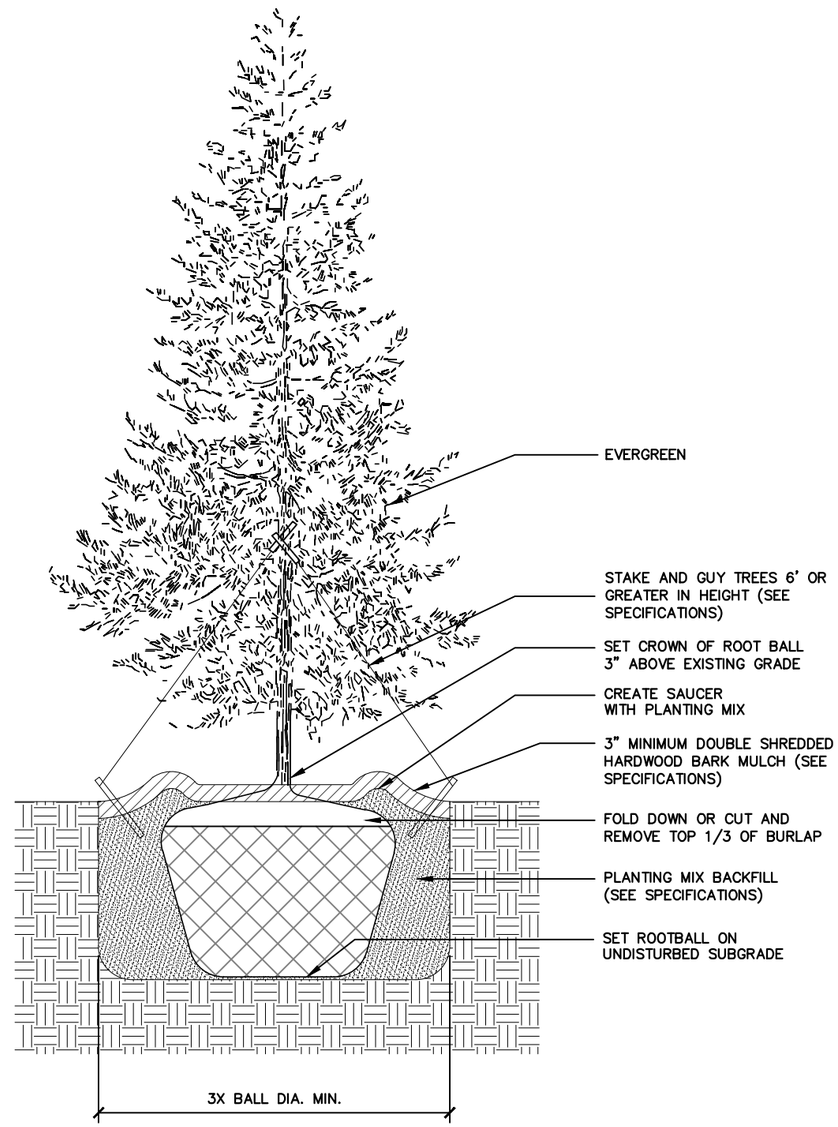

LANDSCAPING DETAIL

SCALE: NONE

2

Parallel INFRASTRUCTURE

T-Mobile stick together

8550 BRYN MAWR AVENUE,
SUITE 100
CHICAGO, ILLINOIS 60631

CelluSite, LLC

PLANS PREPARED BY:

W-T COMMUNICATION DESIGN GROUP, LLC.
WIRELESS INFRASTRUCTURE
2675 Pratum Avenue
Hoffman Estates, Illinois 60192
PH: (224) 293-6333 FAX: (224) 293-6444
www.wtengineering.com

COPYRIGHT © 2017 W-T COMMUNICATION DESIGN GROUP, LLC.

A&E LICENSE:

JEFFERY GUTOWSKY
PROFESSIONAL ENGINEER
STATE OF WISCONSIN
LICENSE # 0035509-006
EXPIRES: 07/31/2018 SIGNED: / /

REVISIONS:

DATE	DESCRIPTION	BY	REV
08/01/16	FOR CLIENT REVIEW	ATK	A
10/11/16	REVISIONS	RSM	B
01/03/17	REVISIONS	RSM	C
01/04/17	REVISIONS	RSM	D

SITE INFORMATION:

ML91104B

CHAPEL HILL RL

6131 W. CHAPEL HILL ROAD
MEQUON, WI 53097
OZAUKEE COUNTY

W-T PROJECT NUMBER:

T1601045

SHEET TITLE:

LANDSCAPE DETAILS

SHEET NUMBER:

L-1

Attachment: packet (2070 : CellusSite, LLC)

NOTE:
CONTRACTOR TO VERIFY ALL HEIGHTS AND AZIMUTHS IN FIELD PRIOR TO CONSTRUCTION. CONTRACTOR SHALL NOTIFY T–MOBILE AND ENGINEERING FIRM OF ANY DISCREPANCIES BEFORE PROCEEDING.

NOTE:
CONTRACTOR SHALL VERIFY ALL FINAL CONNECTION LOCATIONS WITH T–MOBILE ENGINEER, RF ENGINEER, AND NET–OPS PRIOR TO INSTALLATION.

NOTE:
THIS DRAWING IS FOR REFERENCE ONLY. REFER TO TOWER MANUFACTURER'S SPECIFICATIONS AND DESIGN DOCUMENTS FOR CONSTRUCTION OF TOWER AND TOWER FOUNDATION.

NOTE:
CONTRACTOR SHALL BE RESPONSIBLE FOR VERIFYING FINAL RF CONFIGURATION AND NOTIFY T–MOBILE AND ENGINEERING FIRM WITH ANY DISCREPANCIES.

NOTE:
CONTRACTOR TO USE PROPER TORQUE WRENCH WHEN INSTALLING AND TIGHTENING CONNECTORS TO INSURE PROPER FIT.

NOTE:
CONTRACTOR TO ARRANGE NEW MODULES/EQUIPMENT TO AVOID INTERFERING WITH SAFETY CLIMB.

NOTE:
W–T'S SCOPE OF WORK DOES NOT INCLUDE A STRUCTURAL EVALUATION OF THIS TOWER OR STRUCTURE. NEW ANTENNAS AND EQUIPMENT SHOWN ON THIS PLAN HAVE NOT BEEN EVALUATED TO VERIFY THE TOWER OR STRUCTURE HAS THE CAPACITY TO ADEQUATELY SUPPORT THESE ANTENNAS. PRIOR TO ANY ANTENNA OR EQUIPMENT INSTALLATION, A STRUCTURAL EVALUATION OF THE TOWER OR STRUCTURE, INCLUDING ALL ANTENNA MOUNTING SYSTEMS & HARDWARE SHALL BE PERFORMED.

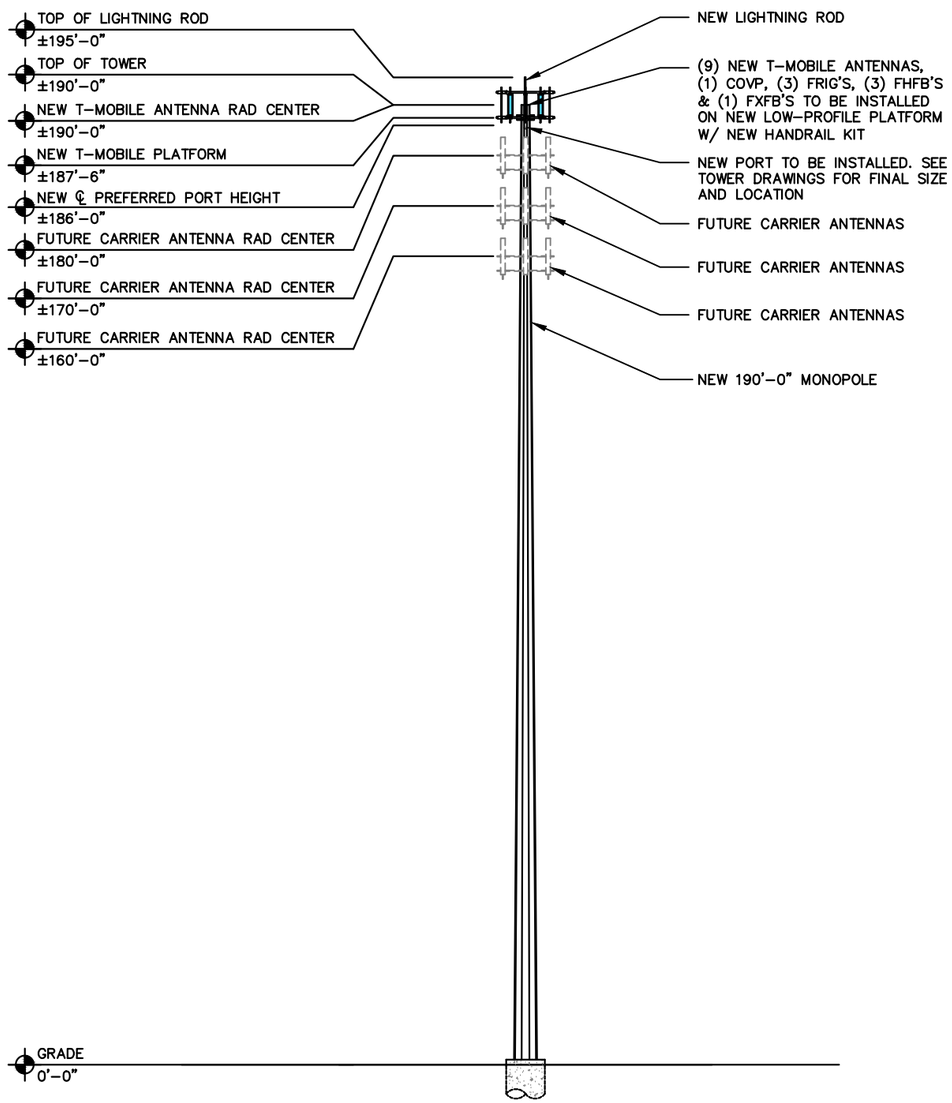

TOWER ELEVATION

SCALE: 1" = 30'-0"

1

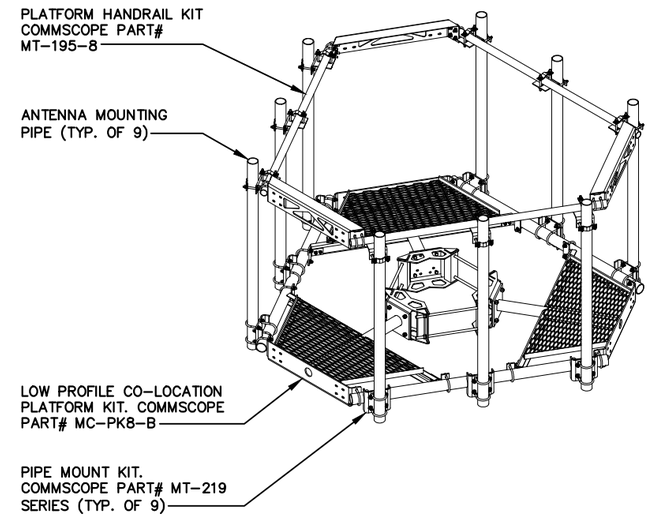

ANTENNA PLATFORM W/ HANDRAIL KIT

SCALE: NONE

2

NOT USED

SCALE: NONE

3

Parallel INFRASTRUCTURE

T-Mobile stick together

8550 BRYN MAWR AVENUE,
SUITE 100
CHICAGO, ILLINOIS 60631

CelluSite, LLC

PLANS PREPARED BY:

W-T COMMUNICATION DESIGN GROUP, LLC.
WIRELESS INFRASTRUCTURE
2675 Pratum Avenue
Hoffman Estates, Illinois 60192
PH: (224) 293-6333 FAX: (224) 293-6444
www.wtengineering.com

COPYRIGHT © 2017 W-T COMMUNICATION DESIGN GROUP, LLC.

A&E LICENSE:

JEFFERY GUTOWSKY
PROFESSIONAL ENGINEER
STATE OF WISCONSIN
LICENSE # 0035509–006
EXPIRES: 07/31/2018 SIGNED: / /

REVISIONS:

DATE	DESCRIPTION	BY	REV
08/01/16	FOR CLIENT REVIEW	ATK	A
10/11/16	REVISIONS	RSM	B
01/03/17	REVISIONS	RSM	C
01/04/17	REVISIONS	RSM	D

SITE INFORMATION:

ML91104B

CHAPEL HILL RL

6131 W. CHAPEL HILL ROAD
MEQUON, WI 53097
OZAUKEE COUNTY

W-T PROJECT NUMBER:

T1601045

SHEET TITLE:

TOWER ELEVATION

SHEET NUMBER:

A-1

Attachment: packet (2070 : CellusSite, LLC)

ANTENNA & CABLE SCHEDULE

SECTOR	ALPHA			BETA			GAMMA		
LOCATION	A-3	A-2	A-1	B-3	B-2	B-1	C-3	C-2	C-1
TECHNOLOGY	LTE AWS	GSM PCS	LTE-UMTS PCS	LTE AWS	GSM PCS	LTE-UMTS PCS	LTE AWS	GSM PCS	LTE-UMTS PCS
AZIMUTH	350°			120°			230°		
RAD CENTER	±190'-0"			±190'-0"			±190'-0"		
COLOR CODING	RED (7-10)	RED (5-6)	RED (1-4)	GREEN (7-10)	GREEN (5-6)	GREEN (1-4)	BLUE (7-10)	BLUE (5-6)	BLUE (1-4)
ANTENNA MODEL #	ANDREW TMBXX-6516-A2M	ANDREW TMBX-6516-A1M	ANDREW TMBXX-6516-A2M	ANDREW TMBXX-6516-A2M	ANDREW TMBX-6516-A1M	ANDREW TMBXX-6516-A2M	ANDREW TMBXX-6516-A2M	ANDREW TMBX-6516-A1M	ANDREW TMBXX-6516-A2M
MECHANICAL DOWNTILT	0	0	0	0	0	0	0	0	0
ELECTRICAL DOWNTILT	–	–	–	–	–	–	–	–	–
RRU TYPE	FRIG	FXFB	FHFB	FRIG	SHARED FXFB	FHFB	FRIG	SHARED FXFB	FHFB
FIBER JUMPER LENGTH	±15'-0"	±15'-0"	±15'-0"	±15'-0"	–	±15'-0"	±15'-0"	–	±15'-0"
RF JUMPER LENGTH	±6'-0"	±10'-0"	±6'-0"	±6'-0"	±10'-0"	±6'-0"	±6'-0"	±15'-0"	±6'-0"
HCS DIA. & TYPE	HIGH CAP HCS	–	–	–	–	–	–	–	–
HCS ACTUAL LENGTH	±225'-0"	–	–	–	–	–	–	–	–
HCS FACTORY LENGTH	±250'-0"	–	–	–	–	–	–	–	–

NOTE:
W-T'S SCOPE OF WORK DOES NOT INCLUDE A STRUCTURAL EVALUATION OF THIS TOWER OR STRUCTURE. NEW ANTENNAS AND EQUIPMENT SHOWN ON THIS PLAN HAVE NOT BEEN EVALUATED TO VERIFY THE TOWER OR STRUCTURE HAS THE CAPACITY TO ADEQUATELY SUPPORT THESE ANTENNAS. PRIOR TO ANY ANTENNA OR EQUIPMENT INSTALLATION, A STRUCTURAL EVALUATION OF THE TOWER OR STRUCTURE, INCLUDING ALL ANTENNA MOUNTING SYSTEMS & HARDWARE SHALL BE PERFORMED.

NOTE:
RFDS WAS NOT PROVIDED PRIOR TO THE DESIGN OF THIS SITE. CONTRACTOR TO OBTAIN CURRENT RFDS PRIOR TO CONSTRUCTION

NOTE:
ANTENNA INFORMATION OBTAINED FROM T-MOBILE RF DATA CONFIGURATION SHEET DATED 09/01/16

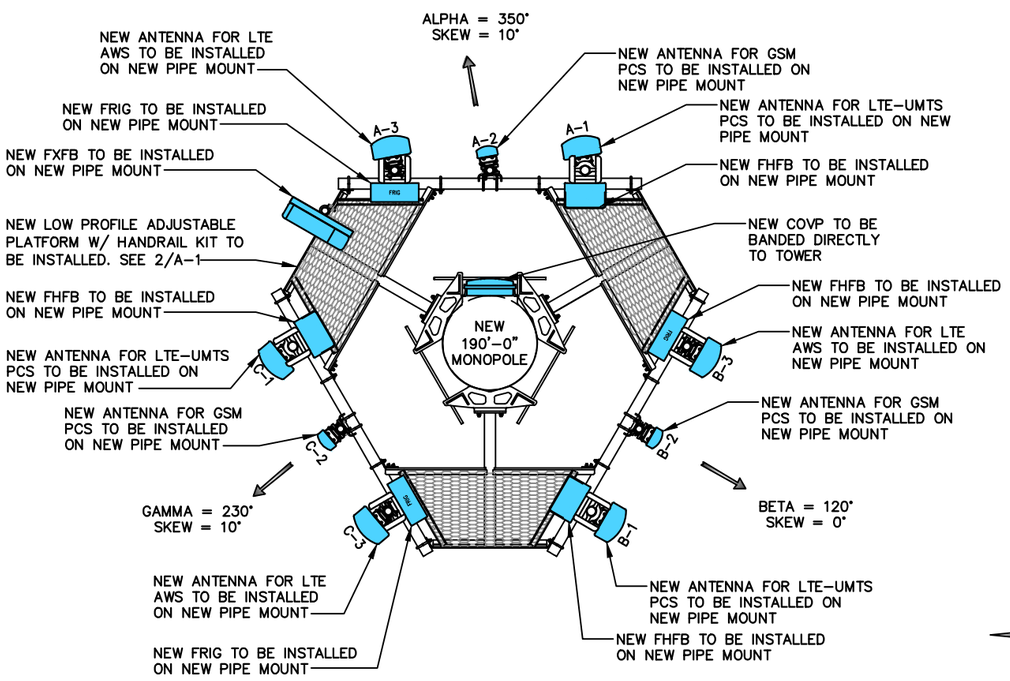

ANTENNA PLAN

SCALE: 1/4" = 1'-0"

1

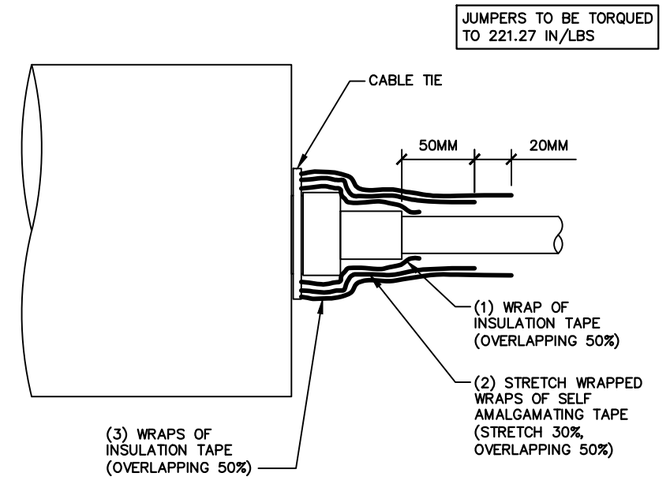

RF JUMPER CONNECTION DETAIL

SCALE: NONE

2

NOT USED

SCALE: NONE

3

Parallel INFRASTRUCTURE

T-Mobile stick together
8550 BRYN MAWR AVENUE, SUITE 100
CHICAGO, ILLINOIS 60631

CelluSite, LLC

PLANS PREPARED BY:
W-T COMMUNICATION DESIGN GROUP, LLC.
WIRELESS INFRASTRUCTURE
2675 Pratum Avenue
Hoffman Estates, Illinois 60192
PH: (224) 293-6333 FAX: (224) 293-6444
www.wtengineering.com

COPYRIGHT © 2017 W-T COMMUNICATION DESIGN GROUP, LLC.

A&E LICENSE:

JEFFERY GUTOWSKY
PROFESSIONAL ENGINEER
STATE OF WISCONSIN
LICENSE # 0035509-006
EXPIRES: 07/31/2018 SIGNED: / /

REVISIONS:

DATE	DESCRIPTION	BY	REV
08/01/16	FOR CLIENT REVIEW	ATK	A
10/11/16	REVISIONS	RSM	B
01/03/17	REVISIONS	RSM	C
01/04/17	REVISIONS	RSM	D

SITE INFORMATION:

ML91104B

CHAPEL HILL RL

6131 W. CHAPEL HILL ROAD
MEQUON, WI 53097
OZAUKEE COUNTY

W-T PROJECT NUMBER:

T1601045

SHEET TITLE:

ANTENNA PLAN

SHEET NUMBER:

A-2

Attachment: packet (2070 : CellusSite, LLC)

NOT USED

SCALE: NONE

1

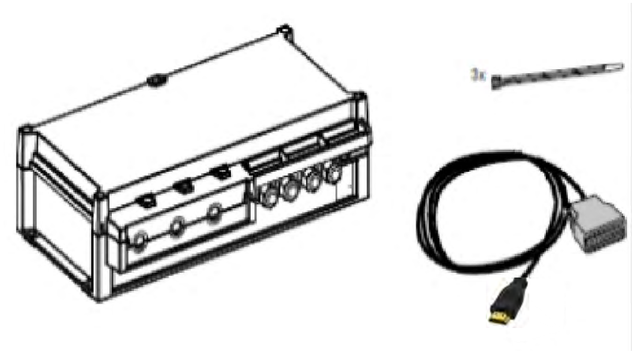

FSEB

SCALE: NONE

2

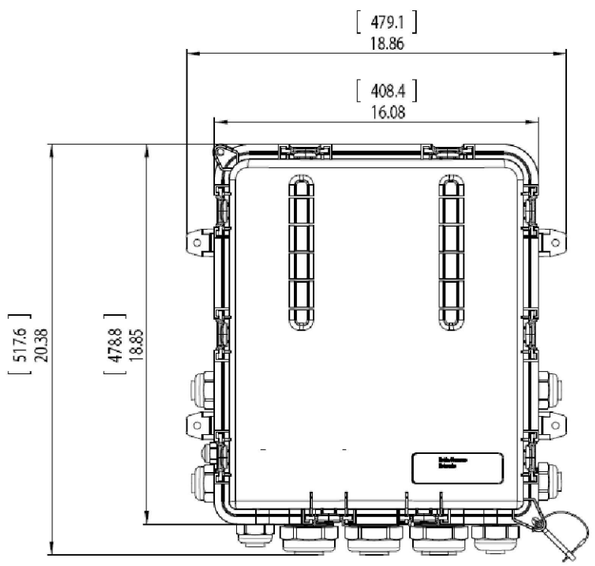

COVP

SCALE: NONE

3

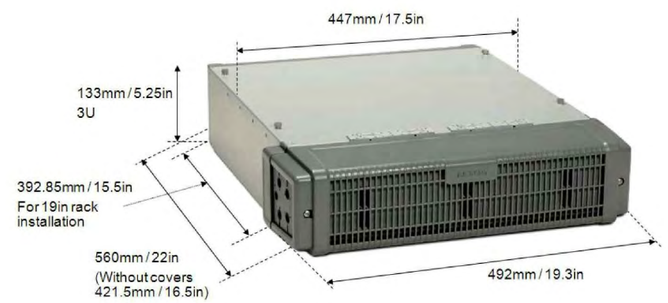

FSMF

SCALE: NONE

4

Parallel INFRASTRUCTURE

T-Mobile
stick together

8550 BRYN MAWR AVENUE,
SUITE 100
CHICAGO, ILLINOIS 60631

CelluSite, LLC

PLANS PREPARED BY:

W-T COMMUNICATION DESIGN GROUP, LLC.
WIRELESS INFRASTRUCTURE
2675 Pratum Avenue
Hoffman Estates, Illinois 60192
PH: (224) 293-6333 FAX: (224) 293-6444
www.wtengineering.com

COPYRIGHT © 2017 W-T COMMUNICATION DESIGN GROUP, LLC.

A&E LICENSE:

JEFFERY GUTOWSKY
PROFESSIONAL ENGINEER
STATE OF WISCONSIN
LICENSE # 0035509-006
EXPIRES: 07/31/2018 SIGNED: / /

REVISIONS:

DATE	DESCRIPTION	BY	REV
08/01/16	FOR CLIENT REVIEW	ATK	A
10/11/16	REVISIONS	RSM	B
01/03/17	REVISIONS	RSM	C
01/04/17	REVISIONS	RSM	D

SITE INFORMATION:

ML91104B

CHAPEL HILL RL

6131 W. CHAPEL HILL ROAD
MEQUON, WI 53097
OZAUKEE COUNTY

W-T PROJECT NUMBER:

T1601045

SHEET TITLE:

EQUIPMENT SPECIFICATIONS

SHEET NUMBER:

A-3

Attachment: packet (2070 : CellusSite, LLC)

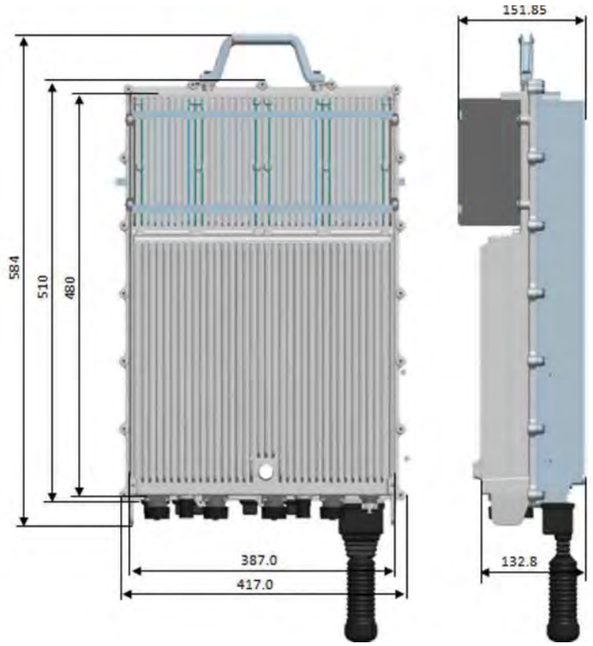

FRIG

SCALE: NONE

1

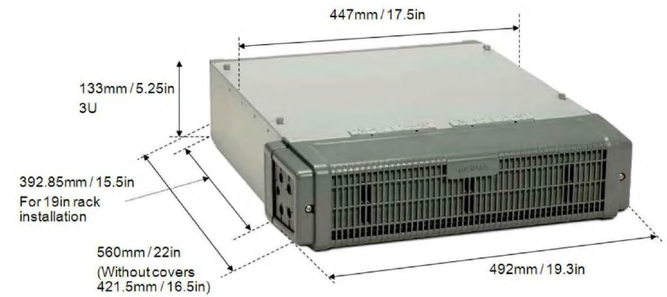

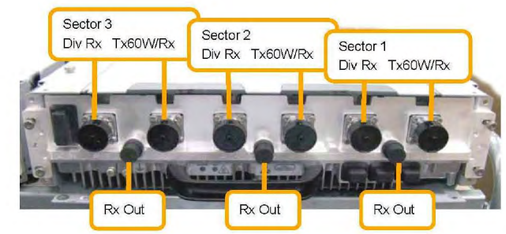

FXFB

SCALE: NONE

2

Interfaces

Figure: FHFB interfaces

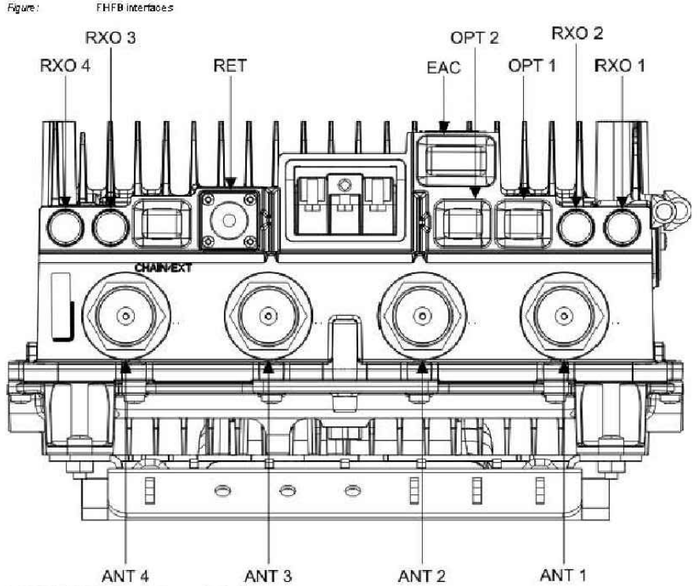

Interface	Label on the HW	Number of interfaces	Connector type
Power connector	DC IN	1	3-pole screw terminal
Antenna connector	ANT	4	7/16
RF external connector	Rx EXT	4	QMA
Remote Electrical Tilt	RET	1	8-pin circular
External Alarm Connection	EAC	1	D-sub MDR14
Optical interface	OPT	3	SFP
Local Management Port	LMP	1	2x15 pin header

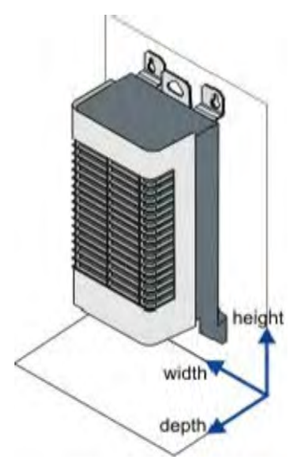

Property	Value
Height	With lower bracket: 872 mm (34.3 in.) Without lower bracket: 637 mm (25.1 in.) Without brackets: 585 mm (23.0 in.)
Depth	200 mm (7.8 in.)
Width	Without solar shield: 320 mm (12.6 in.)
Weight	With lower bracket: 23 kg (51.0 lbs) Without solar shield and mounting shroud: 22 kg (68.5 lbs)

FHFB DETAILS

SCALE: NONE

3

Parallel INFRASTRUCTURE

T-Mobile stick together

8550 BRYN MAWR AVENUE,
SUITE 100
CHICAGO, ILLINOIS 60631

CelluSite, LLC

PLANS PREPARED BY:

W-T COMMUNICATION DESIGN GROUP, LLC.
WIRELESS INFRASTRUCTURE
2675 Pratum Avenue
Hoffman Estates, Illinois 60192
PH: (224) 293-6333 FAX: (224) 293-6444
www.wtengineering.com

COPYRIGHT © 2017 W-T COMMUNICATION DESIGN GROUP, LLC.

A&E LICENSE:

JEFFERY GUTOWSKY
PROFESSIONAL ENGINEER
STATE OF WISCONSIN
LICENSE # 0035509-006
EXPIRES: 07/31/2018 SIGNED: / /

REVISIONS:

DATE	DESCRIPTION	BY	REV
08/01/16	FOR CLIENT REVIEW	ATK	A
10/11/16	REVISIONS	RSM	B
01/03/17	REVISIONS	RSM	C
01/04/17	REVISIONS	RSM	D

SITE INFORMATION:

ML91104B

CHAPEL HILL RL

6131 W. CHAPEL HILL ROAD
MEQUON, WI 53097
OZAUKEE COUNTY

W-T PROJECT NUMBER:

T1601045

SHEET TITLE:

EQUIPMENT SPECIFICATIONS

SHEET NUMBER:

A-4

Attachment: packet (2070 : CellusIte, LLC)

NOTES:

1. MATERIAL: HEAVY GAUGE WELDED STEEL FRAME
2. STANDARD FINISH: TELCO GRAY POWDER COAT
3. TELCORDIA GR-63-CORE TESTED FOR SEISMIC ZONE 4 QUALIFICATION.
4. TAPPED MOUNTING HOLES PROVIDED IN FRONT AND REAR FLANGES.
5. LOAD RATING: 925 LBS IN ZONE 4 SEISMIC AREAS (INCLUDES 50 LBS OF OVERHEAD CABLE).
6. EMPTY RACK WEIGHT: 147 LBS.

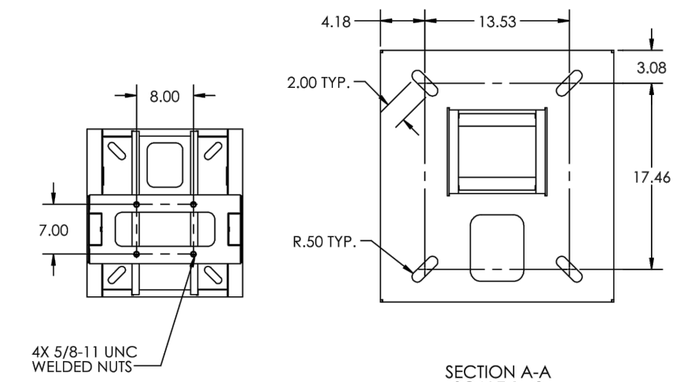

SECTION A-A
SCALE 1 : 8

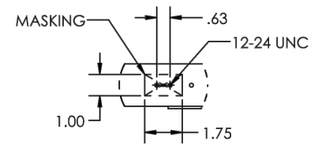

DETAIL E
SCALE 1 : 4
MASKED GROUNDING
PROVISIONS, 4 PLCS.

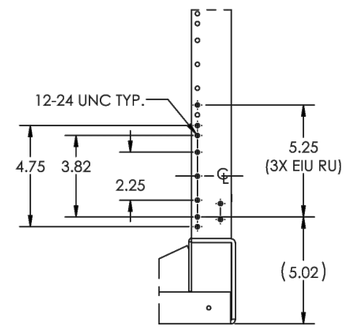

DETAIL B
SCALE 1 : 4
(NOKIA FLEXI
HOLE PATTERN)

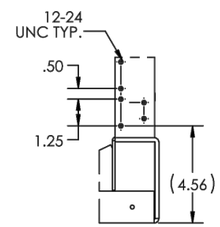

DETAIL C
SCALE 1 : 4
(EIA HOLE
PATTERN)

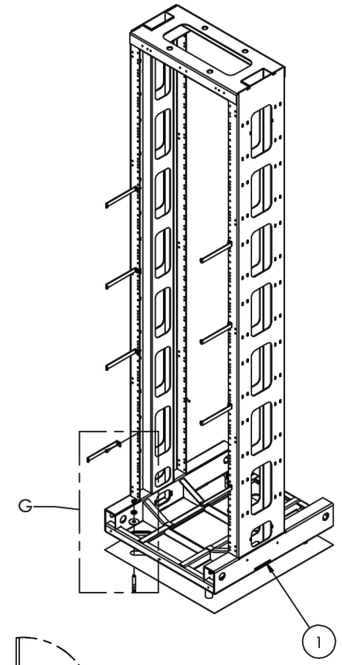

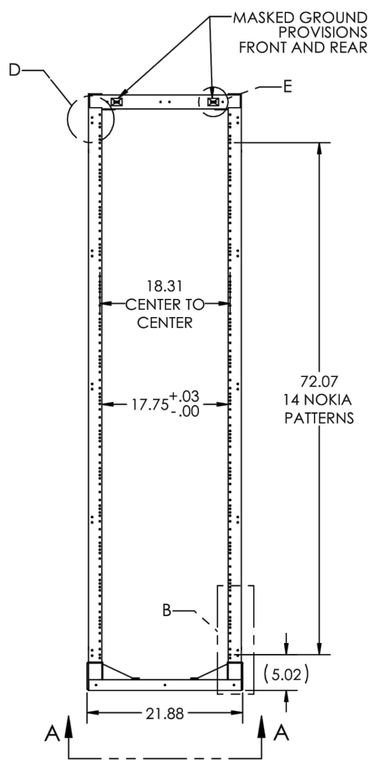

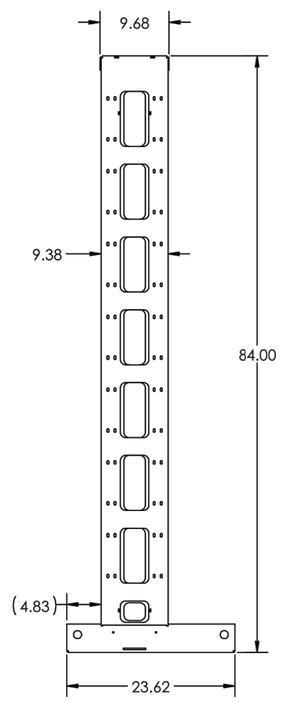

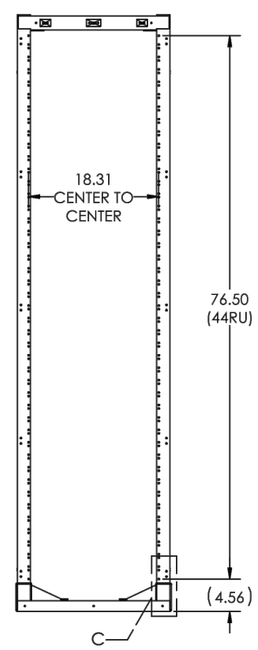

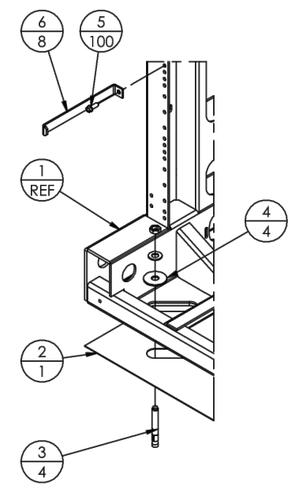

DETAIL G
SCALE 1 : 5

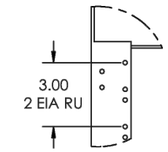

DETAIL D
SCALE 1 : 4

DESCRIPTION

- 19" PANEL MOUNTING
- 600MM DEEP BASE
- 7' RACK
- 44 EIA RU IN REAR
- 14 NOKIA FLEXI PATTERNS IN FRONT + 2 EIA RU
- TELCO GRAY

ITEM NO.	DESCRIPTION	QTY.
6	BRACKET, CABLE TIE, 6.0 " LG (P/N CT-001)	8
5	SCREW, 12-24 X 5/8, HEX FLANGE SLOT, ZINC	100
4	WASHER, 3/8 X 1.25 O.D. FENDER, ZC	4
3	ANCHOR, WEDGE, 3/8 X 3.00 LONG	4
2	PAD, ISOLATION, 19" TITAN RACKS, 600MM DEEP BASE	1
1	TITAN RACK, 19", 600 MM DEEP, 7FT, NOKIA FLEXI HOLES	1

DELTA GREENTECH
2925 E. Plano Pkwy.
Plano, TX 75074
PH. 214-431-3550

	NAME	DATE
DRAWN	RNA	05-10-16
ENG APPR.		

TITLE: TITAN RACK, 19", 600 MM DEEP, 7FT, NOKIA FLEXI HOLES

UNLESS OTHERWISE SPECIFIED: DIMENSIONS ARE IN INCHES
PROJECTION:

SIZE: C | DWG. NO.: 3921896900 | REV: A
SCALE: 1:12 | SHEET 1 OF 1

PROPRIETARY AND CONFIDENTIAL
THE INFORMATION CONTAINED IN THIS DRAWING IS THE SOLE PROPERTY. ANY REPRODUCTION IN PART OR AS A WHOLE IS PROHIBITED.

FOR REFERENCE

19" EQUIPMENT RACK SPECIFICATIONS | 1

SCALE: NONE

Parallel INFRASTRUCTURE

T-Mobile stick together

8550 BRYN MAWR AVENUE,
SUITE 100
CHICAGO, ILLINOIS 60631

CelluSite, LLC

PLANS PREPARED BY:

W-T COMMUNICATION DESIGN GROUP, LLC.
WIRELESS INFRASTRUCTURE
2675 Pratum Avenue
Hoffman Estates, Illinois 60192
PH: (224) 293-6333 FAX: (224) 293-6444
www.wtengineering.com

COPYRIGHT © 2017 W-T COMMUNICATION DESIGN GROUP, LLC.

A&E LICENSE:

JEFFERY GUTOWSKY
PROFESSIONAL ENGINEER
STATE OF WISCONSIN
LICENSE # 0035509-006
EXPIRES: 07/31/2018 SIGNED: / /

REVISIONS:

DATE	DESCRIPTION	BY	REV
08/01/16	FOR CLIENT REVIEW	ATK	A
10/11/16	REVISIONS	RSM	B
01/03/17	REVISIONS	RSM	C
01/04/17	REVISIONS	RSM	D

SITE INFORMATION:

ML91104B
CHAPEL HILL RL
6131 W. CHAPEL HILL ROAD
MEQUON, WI 53097
OZAUKEE COUNTY

W-T PROJECT NUMBER: T1601045

SHEET TITLE: **EQUIPMENT RACK SPECIFICATIONS**

SHEET NUMBER: **A-4.1**

Attachment: packet (2070 : CellusIte, LLC)

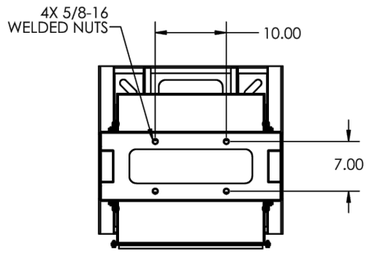

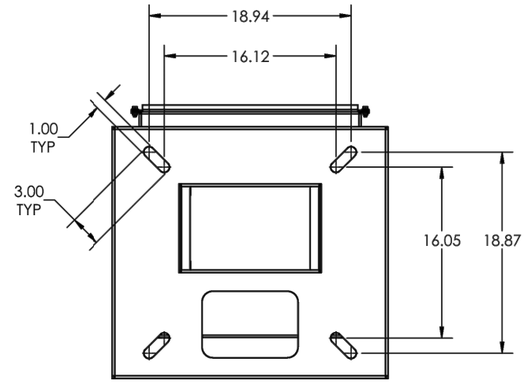

SECTION A-A
SCALE 1 : 8

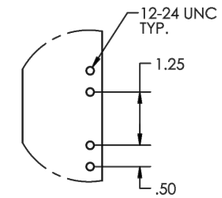

DETAIL B
SCALE 1 : 2

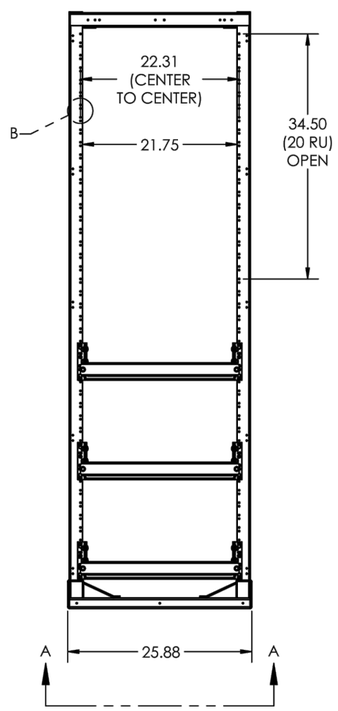

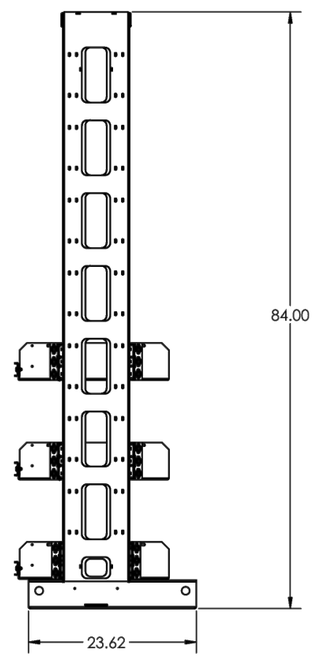

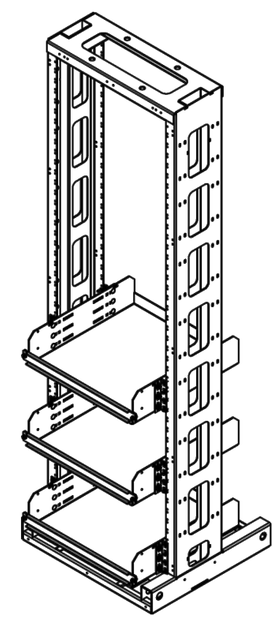

DESCRIPTION

- 23" PANEL MOUNTING
- 600MM DEEP BASE
- 7' RACK
- EIA RACK HOLE SPACING
- TELCO GRAY
- 3-48V BATTERY STRINGS
- 2 GA WIRE
- 200A BREAKER

NOTES:

1. MATERIAL: RACK IS MADE OF HEAVY GAUGE WELDED STEEL. TRAYS ARE HEAVY GAUGE WELDED STEEL.
2. FINISH: POWDER COAT GRAY
3. APPROXIMATE EMPTY WEIGHT (WITHOUT BATTERIES): 270 LBS.
4. INSTALLED DELTA DC PLANT NOT SHOWN.
5. CABLE KIT IS WIRED TO DC PLANT AT FACTORY.
6. NO ADDITIONAL BUS IS INCLUDED IN THIS SYSTEM.

PROPRIETARY AND CONFIDENTIAL
THE INFORMATION CONTAINED IN THIS DRAWING IS PROPRIETARY. ANY REPRODUCTION IN PART OR AS A WHOLE IS PROHIBITED.

USED ON

UNLESS OTHERWISE SPECIFIED:
DIMENSIONS ARE IN INCHES
TOLERANCES:
ANGULAR: MACH ±.5 BEND ±1
TWO PLACE DECIMAL ±.02
THREE PLACE DECIMAL ±.01
PROJECTION:

	NAME	DATE
DRAWN		02-24-16
ENG APPR.		

DELTA GREENTECH
2925 E. Plano Pkwy,
Plano, Texas 75074
PH. 214-431-3550

TITLE: RACK, 7', ZONE 2, W/3 BATTERY TRAYS, PRE-WIRED, 48V

SIZE: C | DWG. NO. 3921866600 | REV A
SCALE: 1:12 | SHEET 1 OF 1

FOR REFERENCE

23" EQUIPMENT RACK SPECIFICATIONS
SCALE: NONE

1

Parallel INFRASTRUCTURE

T-Mobile
stick together
8550 BRYN MAWR AVENUE,
SUITE 100
CHICAGO, ILLINOIS 60631

CelluSite, LLC

PLANS PREPARED BY:
W-T
W-T COMMUNICATION DESIGN GROUP, LLC.
WIRELESS INFRASTRUCTURE
2675 Pratum Avenue
Hoffman Estates, Illinois 60192
PH: (224) 293-6333 FAX: (224) 293-6444
www.wtengineering.com
COPYRIGHT © 2017 W-T COMMUNICATION DESIGN GROUP, LLC.

A&E LICENSE:
JEFFERY GUTOWSKY
PROFESSIONAL ENGINEER
STATE OF WISCONSIN
LICENSE # 0035509-006
EXPIRES: 07/31/2018 SIGNED: / /

REVISIONS:

DATE	DESCRIPTION	BY	REV
08/01/16	FOR CLIENT REVIEW	ATK	A
10/11/16	REVISIONS	RSM	B
01/03/17	REVISIONS	RSM	C
01/04/17	REVISIONS	RSM	D

SITE INFORMATION:
ML91104B
CHAPEL HILL RL
6131 W. CHAPEL HILL ROAD
MEQUON, WI 53097
OZAUKEE COUNTY

W-T PROJECT NUMBER:
T1601045

SHEET TITLE:
EQUIPMENT RACK SPECIFICATIONS

SHEET NUMBER:
A-4.2

Attachment: packet (2070 : CellusSite, LLC)

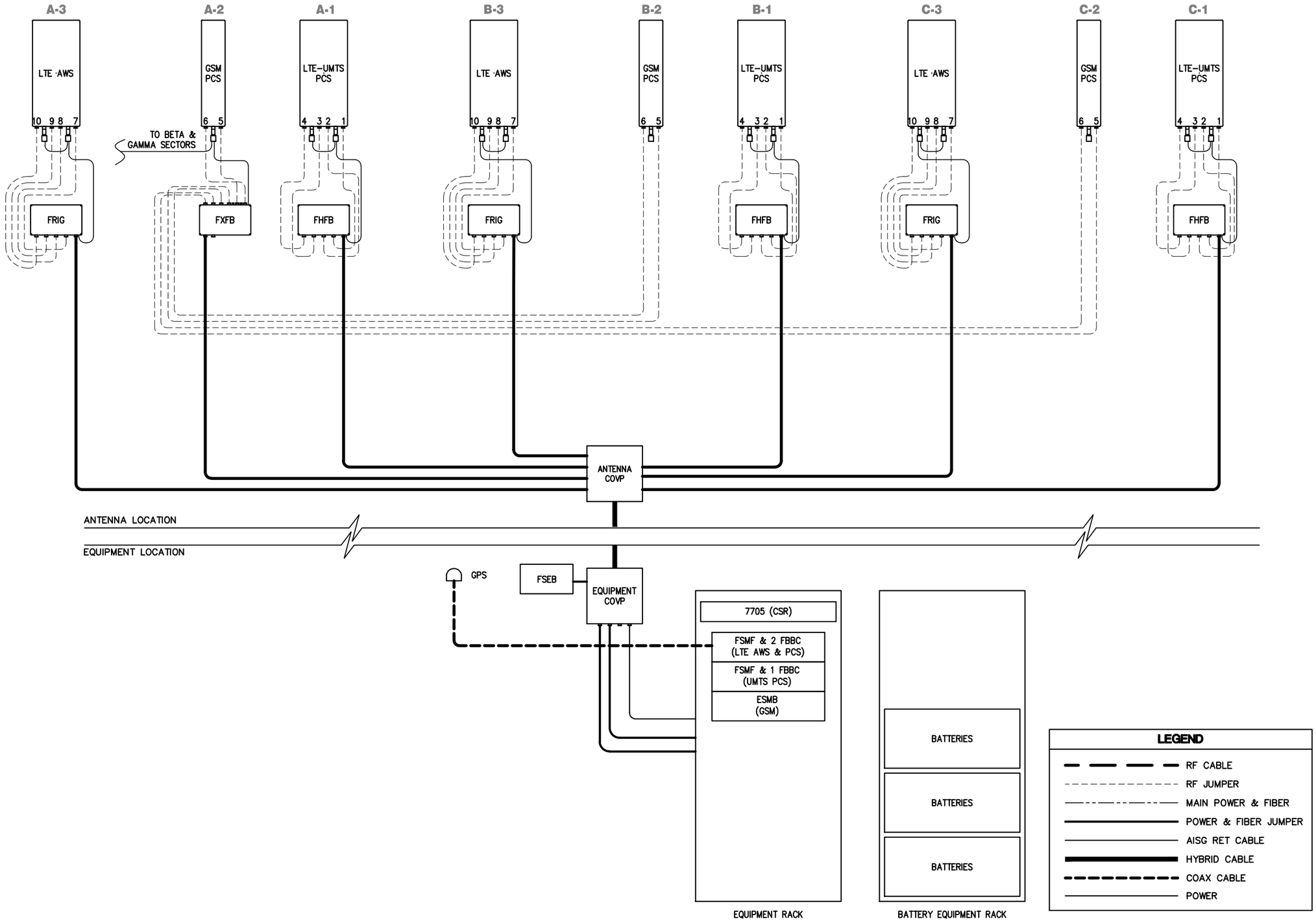

RISER DIAGRAM

SCALE: NONE

1

Parallel INFRASTRUCTURE

T-Mobile stick together

8550 BRYN MAWR AVENUE,
SUITE 100
CHICAGO, ILLINOIS 60631

CelluSite, LLC

PLANS PREPARED BY:

W-T COMMUNICATION DESIGN GROUP, LLC.
WIRELESS INFRASTRUCTURE
2675 Pratum Avenue
Hoffman Estates, Illinois 60192
PH: (224) 293-6333 FAX: (224) 293-6444
www.wtengineering.com

COPYRIGHT © 2017 W-T COMMUNICATION DESIGN GROUP, LLC.

A&E LICENSE:

JEFFERY GUTOWSKY
PROFESSIONAL ENGINEER
STATE OF WISCONSIN
LICENSE # 0035509-006
EXPIRES: 07/31/2018 SIGNED: / /

REVISIONS:

DATE	DESCRIPTION	BY	REV
08/01/16	FOR CLIENT REVIEW	ATK	A
10/11/16	REVISIONS	RSM	B
01/03/17	REVISIONS	RSM	C
01/04/17	REVISIONS	RSM	D

SITE INFORMATION:

ML91104B

CHAPEL HILL RL

6131 W. CHAPEL HILL ROAD
MEQUON, WI 53097
OZAUKEE COUNTY

W-T PROJECT NUMBER:

T1601045

SHEET TITLE:

RISER DIAGRAM

SHEET NUMBER:

A-5

Attachment: packet (2070 : CellusIte, LLC)

VOLTAGE DROP			
FROM SOURCE TO TRANSFORMER			
LENGTH OF RUN	WIRE SIZE	VOLTAGE DROP (VOLTS)	PERCENTAGE OF VOLTAGE
T.B.D.	T.B.D.	T.B.D.	T.B.D.

NOTE:
ELECTRICAL UTILITY ROUTES TO BE VERIFIED IN FIELD WITH UTILITY COORDINATOR AND LOCAL UTILITY COMPANY. ALL UTILITY ROUTES ARE PENDING SURVEY AND FINAL UTILITY EASEMENT LOCATION.

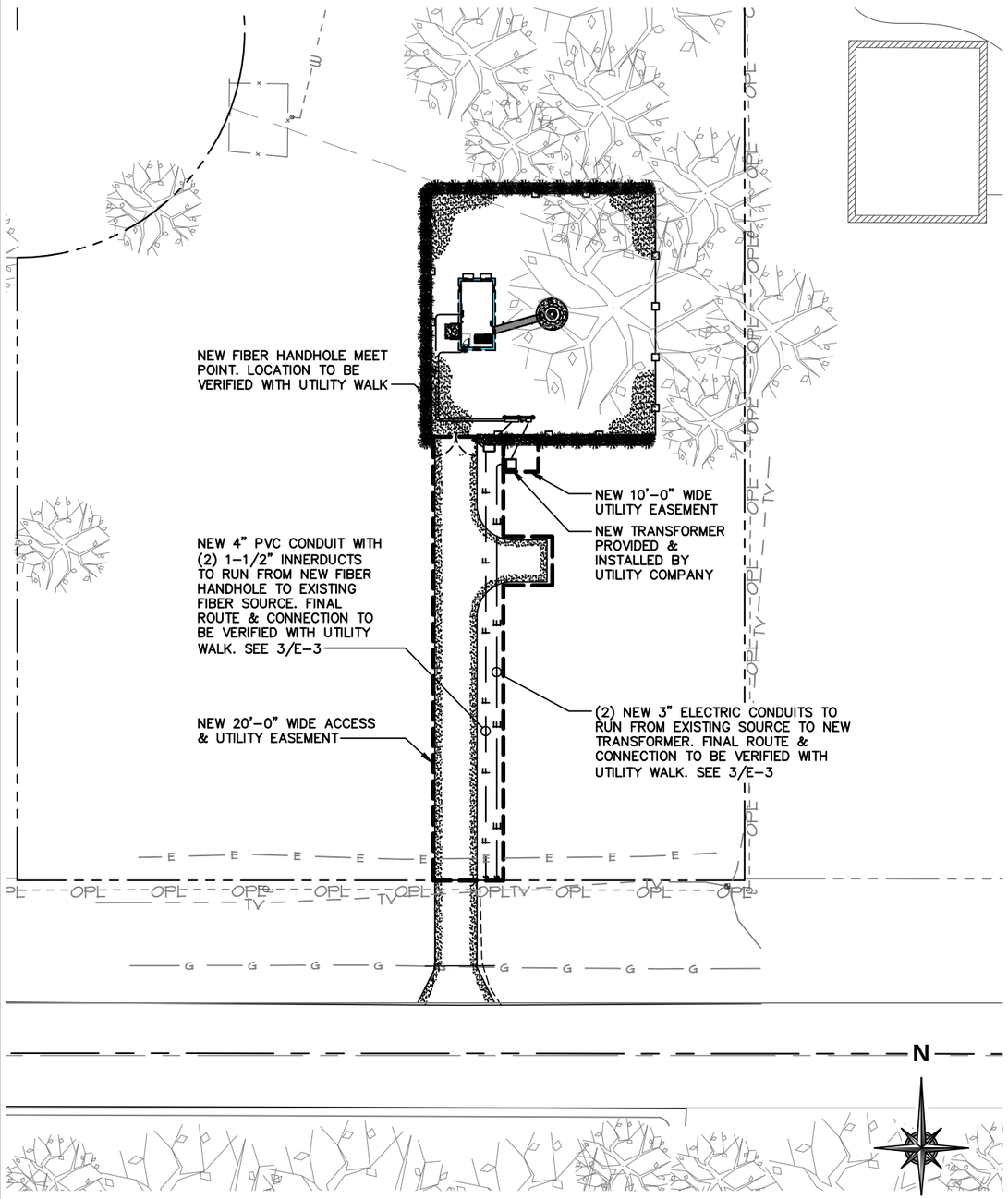

OVERALL UTILITY PLAN

SCALE: 1" = 40'-0"

1

VOLTAGE DROP			
FROM TRANSFORMER TO H-FRAME			
LENGTH OF RUN	WIRE SIZE	VOLTAGE DROP (VOLTS)	PERCENTAGE OF VOLTAGE
±30'-0"	(2) RUNS OF 500 MCM	0.75V	0.31%

VOLTAGE DROP			
FROM H-FRAME TO PPC			
LENGTH OF RUN	WIRE SIZE	VOLTAGE DROP (VOLTS)	PERCENTAGE OF VOLTAGE
±90'-0"	(1) RUN OF (3) 3/0 AWG	3.07V	1.28%

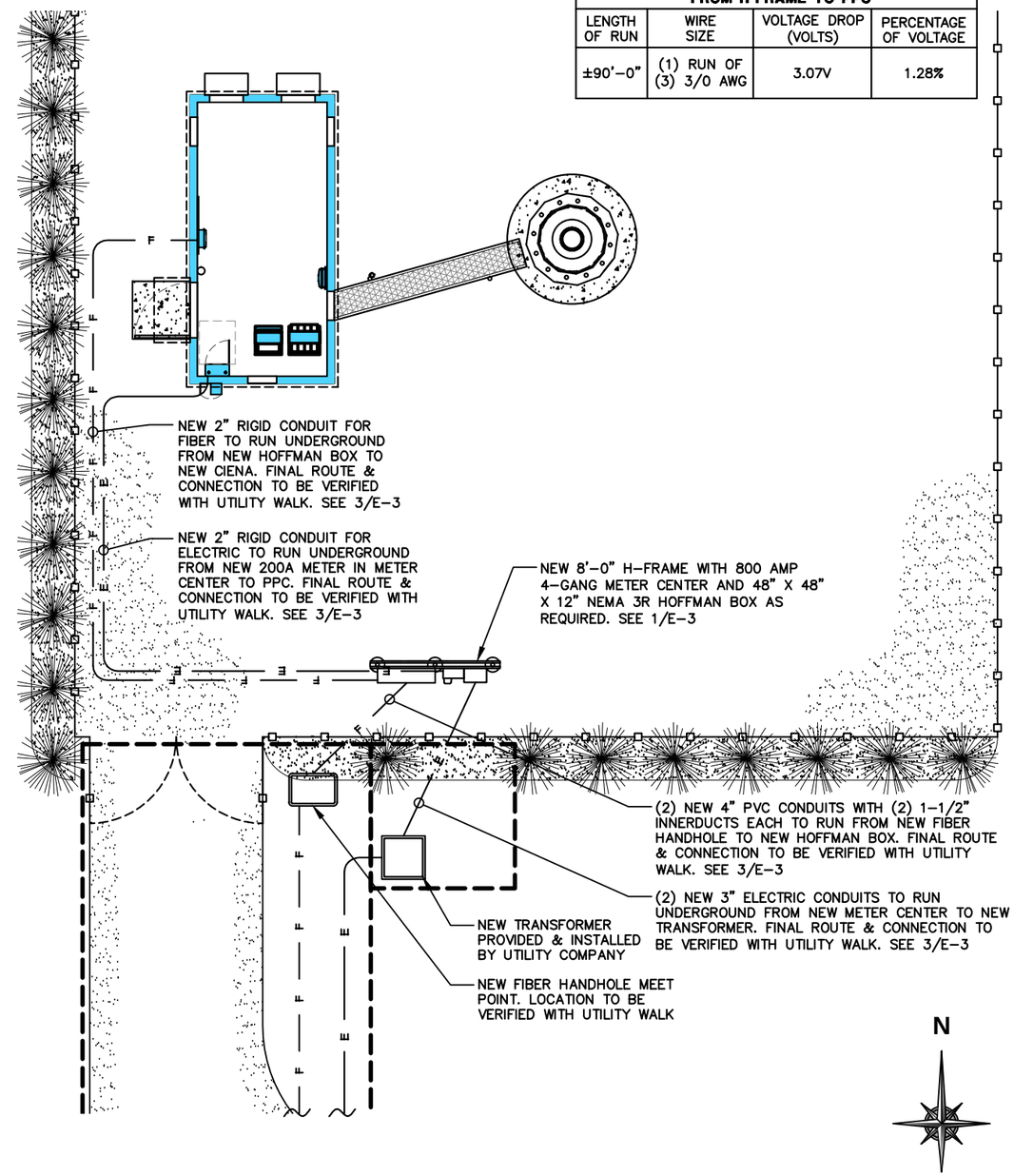

UTILITY PLAN

SCALE: 1" = 10'-0"

2

Parallel INFRASTRUCTURE

T-Mobile stick together
8550 BRYN MAWR AVENUE, SUITE 100
CHICAGO, ILLINOIS 60631

CelluSite, LLC

PLANS PREPARED BY:
W-T
W-T COMMUNICATION DESIGN GROUP, LLC.
WIRELESS INFRASTRUCTURE
2675 Pratum Avenue
Hoffman Estates, Illinois 60192
PH: (224) 293-6333 FAX: (224) 293-6444
www.wtengineering.com

COPYRIGHT © 2017 W-T COMMUNICATION DESIGN GROUP, LLC.

A&E LICENSE:

JEFFERY GUTOWSKY
PROFESSIONAL ENGINEER
STATE OF WISCONSIN
LICENSE # 0035509-006
EXPIRES: 07/31/2018 SIGNED: / /

REVISIONS:

DATE	DESCRIPTION	BY	REV
08/01/16	FOR CLIENT REVIEW	ATK	A
10/11/16	REVISIONS	RSM	B
01/03/17	REVISIONS	RSM	C
01/04/17	REVISIONS	RSM	D

SITE INFORMATION:

ML91104B

CHAPEL HILL RL

6131 W. CHAPEL HILL ROAD
MEQUON, WI 53097
OZAUKEE COUNTY

W-T PROJECT NUMBER:

T1601045

SHEET TITLE:

UTILITY PLANS

SHEET NUMBER:

E-1

Attachment: packet (2070 : CelluSite, LLC)

NOTE:
ALL UNISTRUT, FASTENERS, HARDWARE, ETC, ARE TO BE EITHER HOT-DIPPER GALVANIZED OF STAINLESS STEEL. CONTRACTOR IS NOT TO USE ZINC-PLATED OR PRE-GALVANIZED.

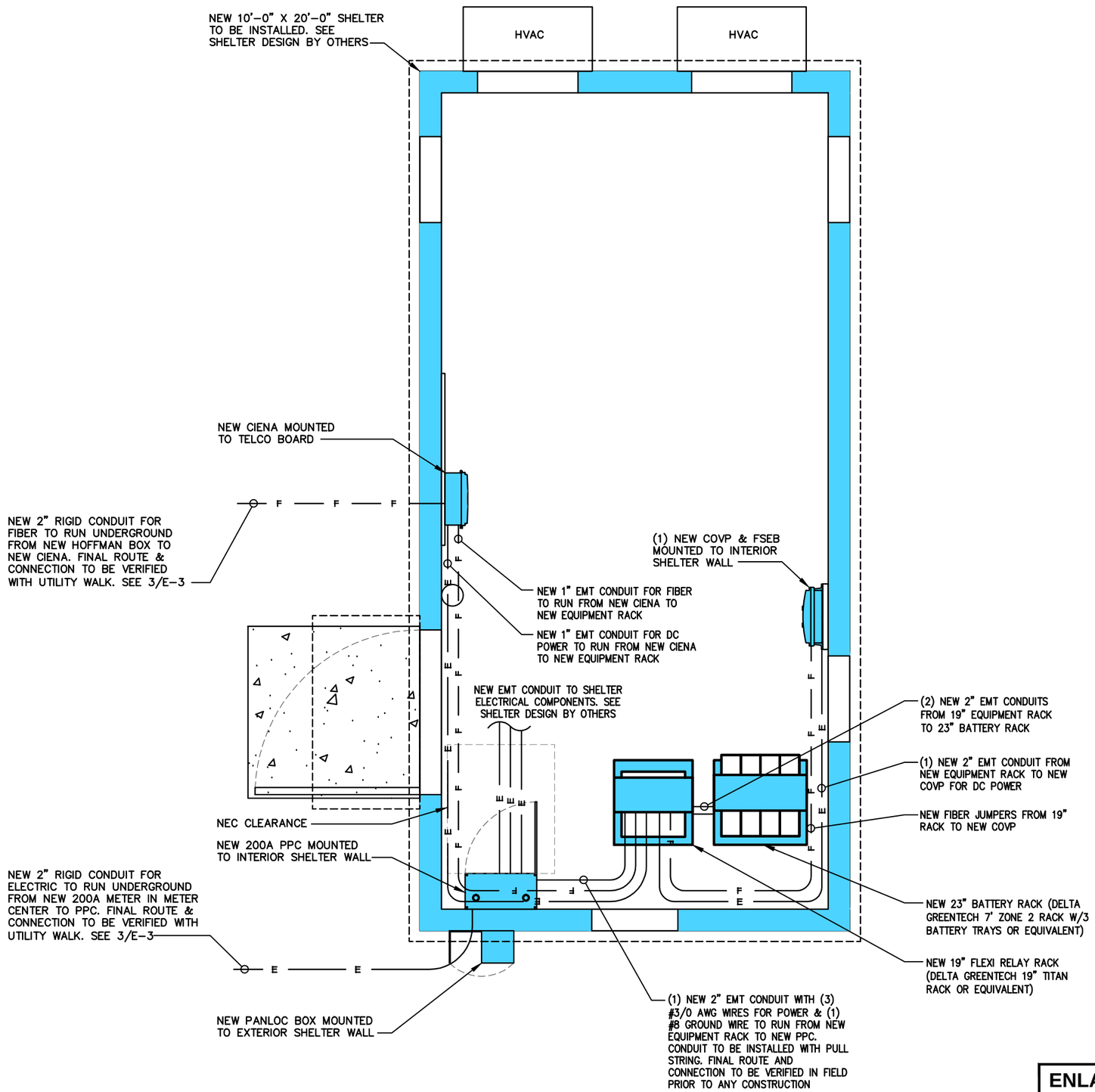

ENLARGED UTILITY PLAN

SCALE: 3/8" = 1'-0"

1

Parallel INFRASTRUCTURE

T-Mobile stick together

8550 BRYN MAWR AVENUE,
SUITE 100
CHICAGO, ILLINOIS 60631

CelluSite, LLC

PLANS PREPARED BY:

W-T COMMUNICATION DESIGN GROUP, LLC.
WIRELESS INFRASTRUCTURE
2675 Pratum Avenue
Hoffman Estates, Illinois 60192
PH: (224) 293-6333 FAX: (224) 293-6444
www.wtengineering.com

COPYRIGHT © 2017 W-T COMMUNICATION DESIGN GROUP, LLC.

A&E LICENSE:

JEFFERY GUTOWSKY
PROFESSIONAL ENGINEER
STATE OF WISCONSIN
LICENSE # 0035509-006
EXPIRES: 07/31/2018 SIGNED: / /

REVISIONS:

DATE	DESCRIPTION	BY	REV
08/01/16	FOR CLIENT REVIEW	ATK	A
10/11/16	REVISIONS	RSM	B
01/03/17	REVISIONS	RSM	C
01/04/17	REVISIONS	RSM	D

SITE INFORMATION:

ML91104B
CHAPEL HILL RL

6131 W. CHAPEL HILL ROAD
MEQUON, WI 53097
OZAUKEE COUNTY

W-T PROJECT NUMBER:

T1601045

SHEET TITLE:

ENLARGED UTILITY PLAN

SHEET NUMBER:

E-2

Attachment: packet (2070 : CelluSite, LLC)

NOT USED

SCALE: NONE

1

NOT USED

SCALE: NONE

2

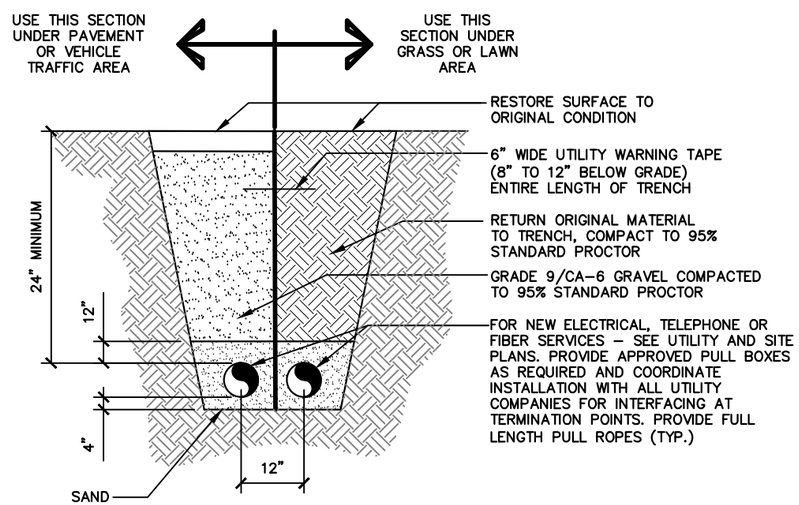

UTILITY TRENCH DETAIL

SCALE: NONE

3

Parallel INFRASTRUCTURE

T-Mobile stick together

8550 BRYN MAWR AVENUE,
SUITE 100
CHICAGO, ILLINOIS 60631

CelluSite, LLC

PLANS PREPARED BY:

W-T COMMUNICATION DESIGN GROUP, LLC.
WIRELESS INFRASTRUCTURE
2675 Pratum Avenue
Hoffman Estates, Illinois 60192
PH: (224) 293-6333 FAX: (224) 293-6444
www.wtengineering.com

COPYRIGHT © 2017 W-T COMMUNICATION DESIGN GROUP, LLC.

A&E LICENSE:

JEFFERY GUTOWSKY
PROFESSIONAL ENGINEER
STATE OF WISCONSIN
LICENSE # 0035509-006
EXPIRES: 07/31/2018 SIGNED: / /

REVISIONS:

DATE	DESCRIPTION	BY	REV
08/01/16	FOR CLIENT REVIEW	ATK	A
10/11/16	REVISIONS	RSM	B
01/03/17	REVISIONS	RSM	C
01/04/17	REVISIONS	RSM	D

SITE INFORMATION:

ML91104B

CHAPEL HILL RL

6131 W. CHAPEL HILL ROAD
MEQUON, WI 53097
OZAUKEE COUNTY

W-T PROJECT NUMBER:

T1601045

SHEET TITLE:

H-FRAME & UTILITY DETAILS

SHEET NUMBER:

E-3

Attachment: packet (2070 : CellusSite, LLC)

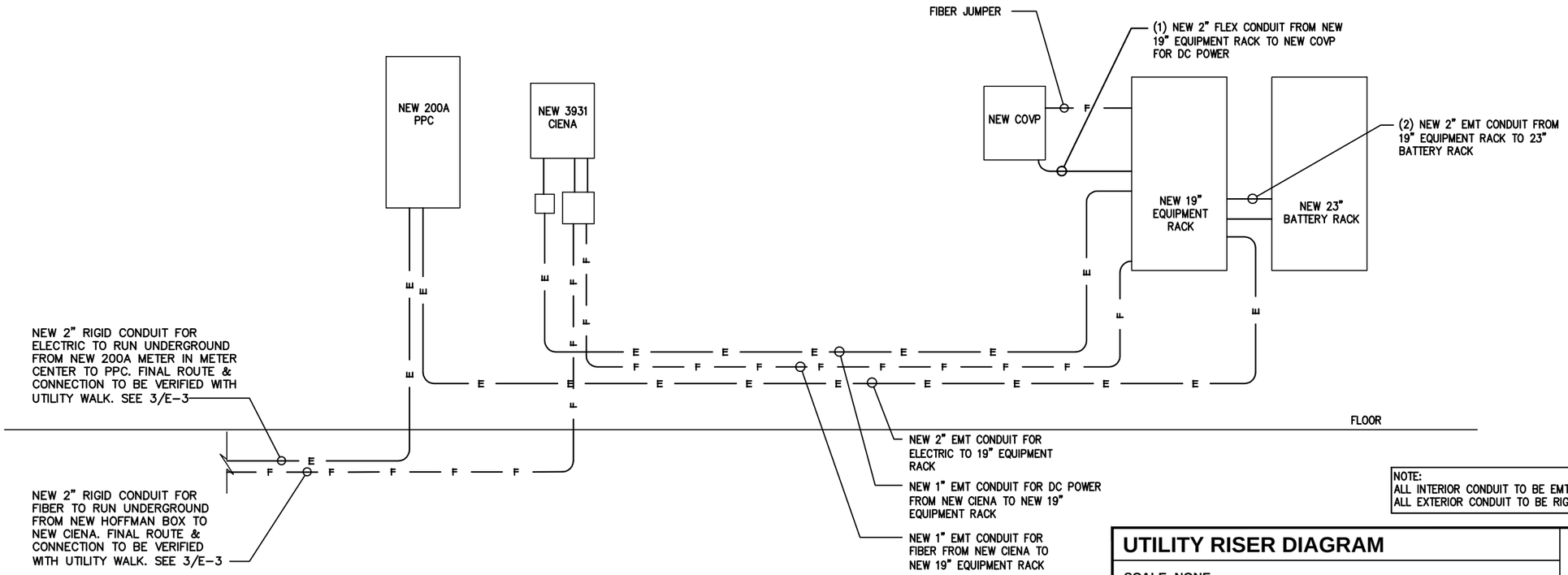

NOTE:
ALL INTERIOR CONDUIT TO BE EMT
ALL EXTERIOR CONDUIT TO BE RIGID

UTILITY RISER DIAGRAM

SCALE: NONE

1

NOT USED

SCALE: NONE

2

Parallel INFRASTRUCTURE

T-Mobile stick together

8550 BRYN MAWR AVENUE,
SUITE 100
CHICAGO, ILLINOIS 60631

CelluSite, LLC

PLANS PREPARED BY:

W-T COMMUNICATION DESIGN GROUP, LLC.
WIRELESS INFRASTRUCTURE
2675 Pratum Avenue
Hoffman Estates, Illinois 60192
PH: (224) 293-6333 FAX: (224) 293-6444
www.wtengineering.com

COPYRIGHT © 2017 W-T COMMUNICATION DESIGN GROUP, LLC.

A&E LICENSE:

JEFFERY GUTOWSKY
PROFESSIONAL ENGINEER
STATE OF WISCONSIN
LICENSE # 0035509-006
EXPIRES: 07/31/2018 SIGNED: / /

REVISIONS:

DATE	DESCRIPTION	BY	REV
08/01/16	FOR CLIENT REVIEW	ATK	A
10/11/16	REVISIONS	RSM	B
01/03/17	REVISIONS	RSM	C
01/04/17	REVISIONS	RSM	D

SITE INFORMATION:

ML91104B

CHAPEL HILL RL

6131 W. CHAPEL HILL ROAD
MEQUON, WI 53097
OZAUKEE COUNTY

W-T PROJECT NUMBER:

T1601045

SHEET TITLE:

UTILITY RISER DIAGRAM

SHEET NUMBER:

E-4

Attachment: packet (2070 : CelluSite, LLC)

NOTE:
GROUNDING IS FOR REFERENCE ONLY. SOIL CONDITIONS SPECIFIED IN GEOTECHNICAL REPORT SHALL BE REFERRED TO PRIOR TO CONSTRUCTION & MATERIAL ORDER. FINAL GROUNDING SYSTEM RESISTANCE TO BE UNDER 5 OHM'S.

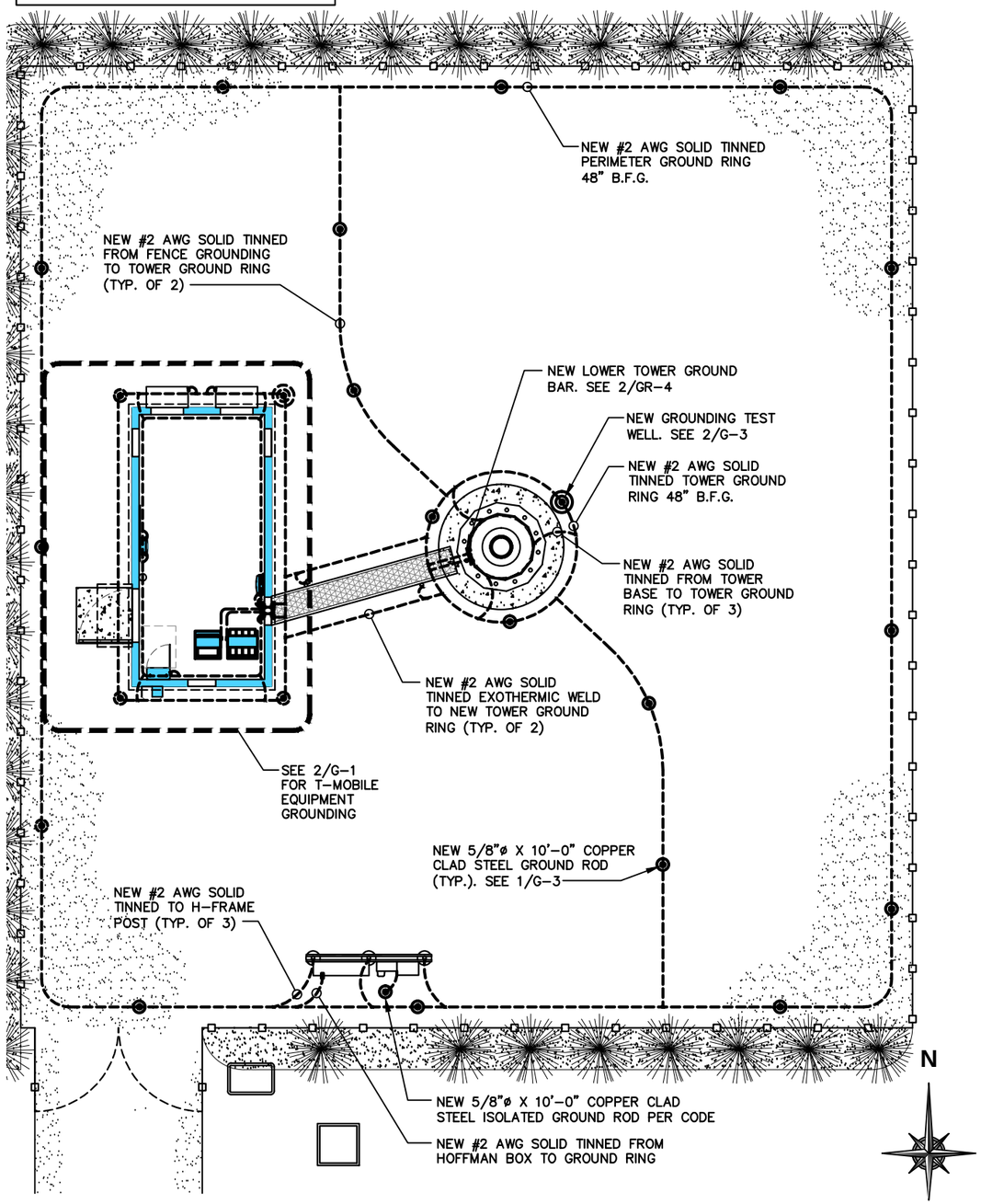

GROUNDING PLAN

SCALE: 1" = 10'-0"

1

LEGEND

- EXOTHERMIC WELD
- MECHANICAL CONNECTION
- COMPRESSION FITTING
- GROUNDING WIRE

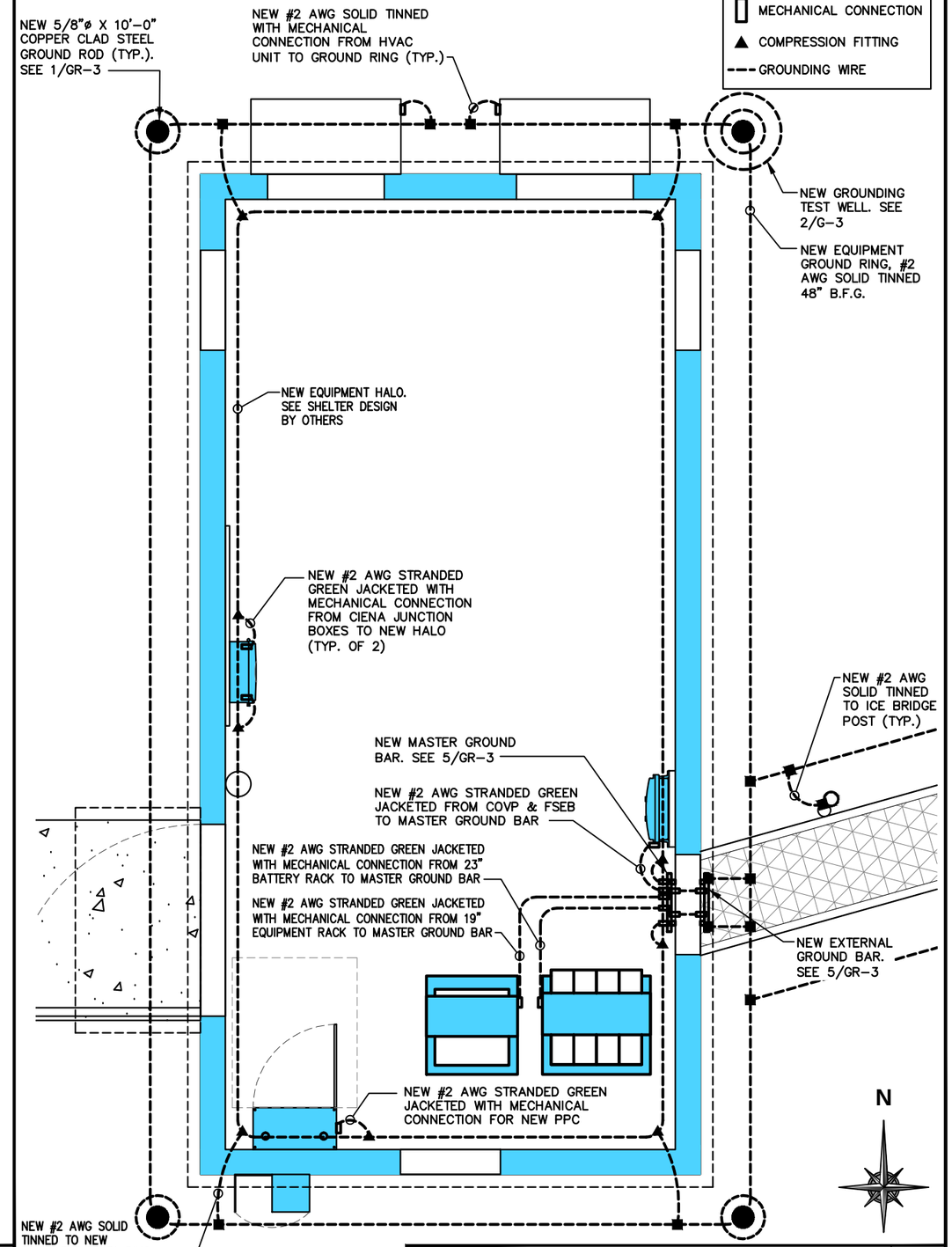

EQUIPMENT GROUNDING PLAN

SCALE: 3/8" = 1'-0"

2

Parallel INFRASTRUCTURE

T-Mobile stick together

8550 BRYN MAWR AVENUE, SUITE 100
CHICAGO, ILLINOIS 60631

CelluSite, LLC

PLANS PREPARED BY:

W-T COMMUNICATION DESIGN GROUP, LLC.
WIRELESS INFRASTRUCTURE
2675 Pratum Avenue
Hoffman Estates, Illinois 60192
PH: (224) 293-6333 FAX: (224) 293-6444
www.wtengineering.com

COPYRIGHT © 2017 W-T COMMUNICATION DESIGN GROUP, LLC.

A&E LICENSE:

JEFFERY GUTOWSKY
PROFESSIONAL ENGINEER
STATE OF WISCONSIN
LICENSE # 0035509-006
EXPIRES: 07/31/2018 SIGNED: / /

REVISIONS:

DATE	DESCRIPTION	BY	REV
08/01/16	FOR CLIENT REVIEW	ATK	A
10/11/16	REVISIONS	RSM	B
01/03/17	REVISIONS	RSM	C
01/04/17	REVISIONS	RSM	D

SITE INFORMATION:

ML91104B
CHAPEL HILL RL

6131 W. CHAPEL HILL ROAD
MEQUON, WI 53097
OZAUKEE COUNTY

W-T PROJECT NUMBER:

T1601045

SHEET TITLE:

GROUNDING PLANS

SHEET NUMBER:

G-1

Attachment: packet (2070 : CellusSite, LLC)

NOTES:

1. ALL ELECTRICAL WORK SHALL CONFORM TO THE NATIONAL ELECTRICAL CODE (EDITION ADOPTED BY LOCAL JURISDICTION) AND APPLICABLE LOCAL CODES.
2. GROUNDING SHALL COMPLY WITH ARTICLE 250 OF THE NATIONAL ELECTRICAL CODE.
3. ALL ELECTRICAL ITEMS SHALL BE U.L. APPROVED OR LISTED.
4. WIRES AND CABLES FOR POWER AND LIGHTING SHALL BE COPPER WITH TYPE XHHW, THWN, OR THHN INSULATION. SOLID CONDUCTORS FOR #10 AWG AND SMALLER, STRANDED FOR LARGER THAN #10 AWG. MINIMUM SIZE #12 AWG.
5. WIRES AND CABLES FOR POWER SHALL BE INSTALLED IN GALVANIZED RIGID STEEL CONDUIT OR FLEXIBLE LIQUID TIGHT CONDUIT AS INDICATED ON DRAWING.
6. CONTRACTOR TO OBTAIN ALL PERMITS, PAY PERMIT FEES, AND BE RESPONSIBLE FOR SCHEDULING INSPECTIONS.
7. COORDINATE WITH UTILITY COMPANIES SERVICE ENTRANCE REQUIREMENTS.
8. PROVIDE ALL LABOR AND MATERIAL DESCRIBED ON THIS DRAWING, AND ALL ITEMS INCIDENTAL TO COMPLETING AND PRESENTING THIS PROJECT AS FULLY OPERATIONAL.
9. GROUNDING CONNECTIONS SHALL BE EXOTHERMIC TYPE TO ANTENNA MASTS, AND THE GROUND BARS. REMAINING GROUNDING CONNECTIONS SHALL BE COMPRESSION FITTINGS.
10. GROUND COAXIAL CABLE SHIELDS AT BOTH ENDS WITH COAX CABLE GROUNDING KITS & INSTALL WEATHER PROOFING KIT AT EACH CONNECTION.
11. ROUTE GROUNDING CONDUCTORS ALONG THE SHORTEST AND STRAIGHTEST PATH POSSIBLE, EXCEPT AS OTHERWISE INDICATED. GROUNDING LEADS SHOULD NEVER BE BENT AT RIGHT ANGLE, ALWAYS MAKE AT LEAST 12" RADIUS BENDS. #6 WIRE CAN BE BENT AT 6" RADIUS WHEN NECESSARY.
12. CONTRACTOR TO PROVIDE GROUND RING AS SHOWN ON GROUNDING SITE PLAN AND GROUNDING RISER DIAGRAM. CONTRACTOR SHALL TEST AND VERIFY THAT THE IMPEDANCE DOES NOT EXCEED 5 OHMS TO GROUND BY MEANS OF A BIDDLE–MEGGER TESTER. GROUNDING AND OTHER OPERATIONAL TESTING SHALL SHALL BE WITNESSED BY THE OWNER'S REPRESENTATIVE.
13. CONTRACTOR TO PROVIDE TELEPHONE CONDUIT AS SHOWN ON PLANS.
14. CONTRACTOR TO PROVIDE ELECTRIC CONDUIT AS SHOWN ON PLANS.
15. NOTIFY LOCAL UTILITY SERVICE PRIOR TO ANY INSTALLATION.
16. ALL EQUIPMENT FURNISHED BY OTHERS SHALL BE PROVIDED WITH PROPER MOTOR STARTERS, DISCONNECTS, CONTROLS, ETC. BY THE ELECTRICAL CONTRACTOR UNLESS SPECIFICALLY NOTED OTHERWISE. THE ELECTRICAL CONTRACTOR SHALL INSTALL AND COMPLETELY WIRE ALL ASSOCIATED EQUIPMENT IN ACCORDANCE WITH MANUFACTURER'S WIRE DIAGRAMS AND AS REQUIRED FOR A COMPLETE OPERATING INSTALLATION. ELECTRICAL CONTRACTOR SHALL VERIFY AND COORDINATE ELECTRICAL CHARACTERISTICS AND REQUIREMENTS OF EQUIPMENT PRIOR TO ROUGH–IN OF CONDUIT AND WIRING TO AVOID CONFLICTS WHERE APPLICABLE.
17. GROUNDING CONDUCTORS SHALL BE COPPER OR SOLID TINNED COPPER. ALL CONNECTIONS MADE BELOW GRADE SHALL BE SOLID TINNED COPPER. ALL CONNECTIONS ABOVE GRADE STRANDED IS PERMITTED. BUS BARS TO BE TIN PLATED COPPER
18. ALL EXOTHERMIC WELDS ABOVE FINISHED GRADE SHALL BE PAINTED WITH CO–GALVANIZED ZINC ENRICHED PAINT TO MATCH COLOR OBJECT BONDED TO.
19. CONNECT COAX GROUND KITS TO MASTER GROUND BAR AT BASE OF TOWER.
20. CONNECT COAX GROUND KITS TO GROUND BUS AT TOP OF TOWER.
21. CONNECT LNA GROUND TO GROUND BUS AT TOP OF TOWER.
22. ALL GROUNDING CONNECTIONS TO BE MADE USING EXOTHERMIC WELD PROCESS UNLESS OTHERWISE APPROVED BY DESIGNER.
23. ELECTRICAL CONTRACTOR TO PULL BONDING JUMPER AT PURCELL ONLY IF DISCONNECT GROUND IS TIED TO GROUND FIELD INSTEAD OF SEPARATE GROUND ROD.
24. PLAN DRAWINGS SHOWN HEREIN DO NOT NECESSARILY DEPICT ELECTRICAL REQUIREMENTS OF INDIVIDUAL EQUIPMENT AND DEVICES SUCH AS THE EQUIPMENT GROUNDING REQUIREMENTS, POWER REQUIREMENTS AND TELCO RACEWAY REQUIREMENTS.
25. PLAN DRAWINGS SHOWN HEREIN ARE DIAGRAMMATIC AND DO NOT NECESSARILY DEPICT THE EXACT EQUIPMENT QUANTITIES, LOCATION, LAYOUT AND CONFIGURATION. REFER TO ARCHITECTURAL PLANS FOR EXACT EQUIPMENT LOCATION, LAYOUT AND CONFIGURATION.
26. REFER TO ARCHITECTURAL PLANS FOR THE LOCATION OF POWER AND TELCO POINT OF CONNECTIONS, THE DISTANCE OF THE RUN, AND THE SUGGESTED CONDUIT ROUTING. FIELD VERIFY EXISTING CONDITIONS SPECIFICALLY FOR CONDUIT ROUTING PRIOR TO BID.
27. NUMBER OF ANTENNAS REPRESENTED IN THIS DETAIL ARE FOR SHOWING CLARITY OF GROUND SYSTEM REQUIREMENTS ONLY. SEE RF INFO FOR ANTENNA QUANTITY.
28. CONTRACTOR TO 'NOALOX' ALL CONNECTIONS TO GROUND BARS.
29. ALL GROUND WIRES ENTERING GROUND SHALL HAVE PVC SLEEVE.

TYPICAL ANTENNA SECTOR

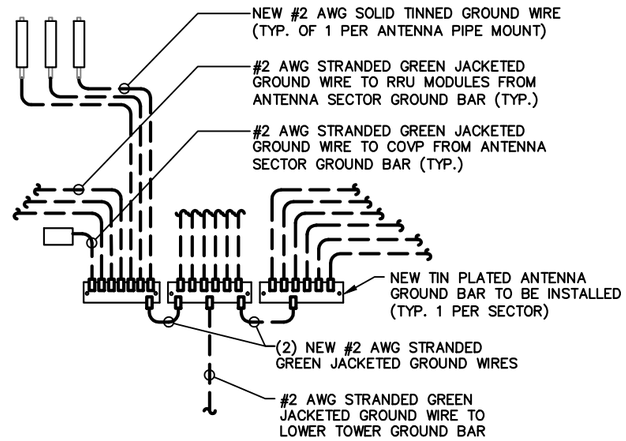

LEGEND

- ■ EXOTHERMIC WELD
- ▯ MECHANICAL CONNECTION
- ▲ COMPRESSION FITTING
- --- GROUNDING WIRE

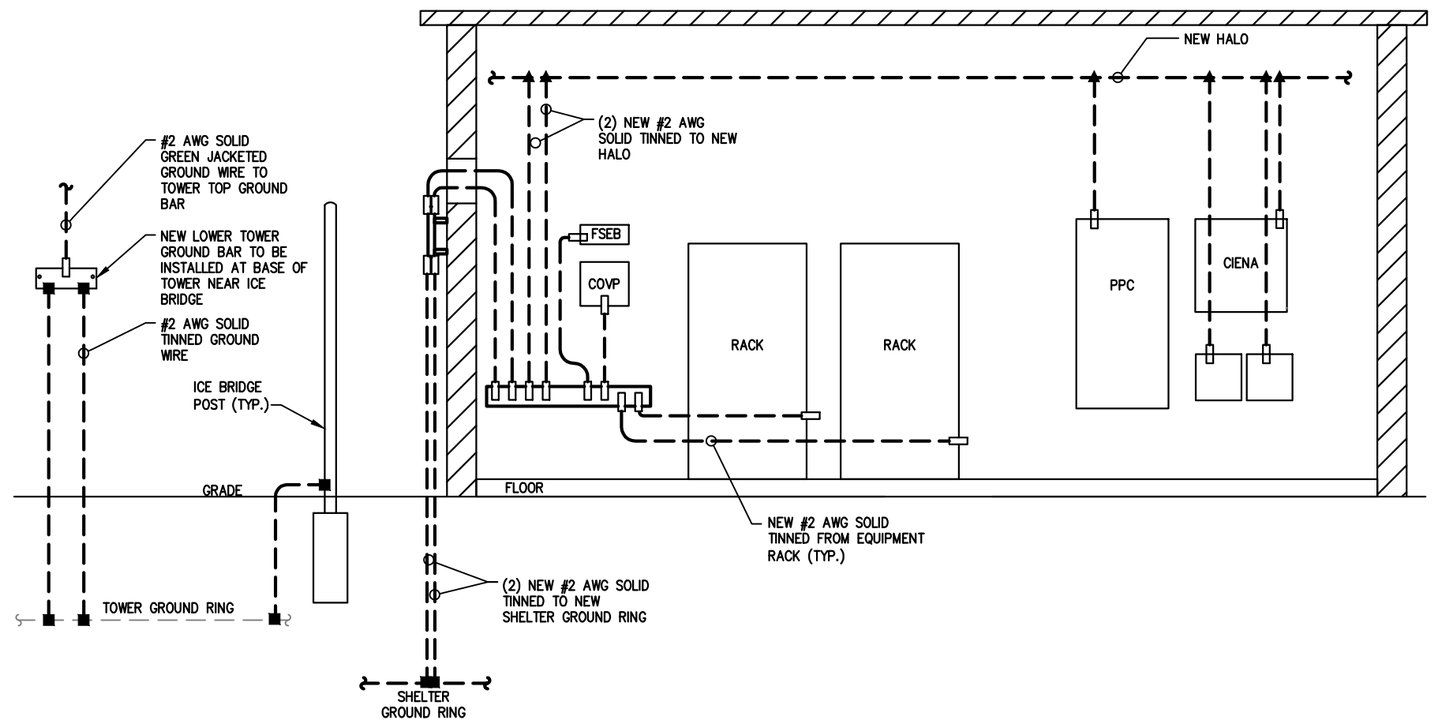

GROUNDING RISER | 1

SCALE: NONE

Parallel INFRASTRUCTURE

T-Mobile stick together

8550 BRYN MAWR AVENUE, SUITE 100
CHICAGO, ILLINOIS 60631

CelluSite, LLC

PLANS PREPARED BY:

W-T COMMUNICATION DESIGN GROUP, LLC.
WIRELESS INFRASTRUCTURE
2675 Pratum Avenue
Hoffman Estates, Illinois 60192
PH: (224) 293-6333 FAX: (224) 293-6444
www.wtengineering.com

COPYRIGHT © 2017 W-T COMMUNICATION DESIGN GROUP, LLC.

A&E LICENSE:

JEFFERY GUTOWSKY
PROFESSIONAL ENGINEER
STATE OF WISCONSIN
LICENSE # 0035509–006
EXPIRES: 07/31/2018 SIGNED: / /

REVISIONS:

DATE	DESCRIPTION	BY	REV
08/01/16	FOR CLIENT REVIEW	ATK	A
10/11/16	REVISIONS	RSM	B
01/03/17	REVISIONS	RSM	C
01/04/17	REVISIONS	RSM	D

SITE INFORMATION:

ML91104B

CHAPEL HILL RL

6131 W. CHAPEL HILL ROAD
MEQUON, WI 53097
OZAUKEE COUNTY

W-T PROJECT NUMBER:

T1601045

SHEET TITLE:

GROUNDING RISER

SHEET NUMBER:

G-2

Attachment: packet (2070 : CellusSite, LLC)

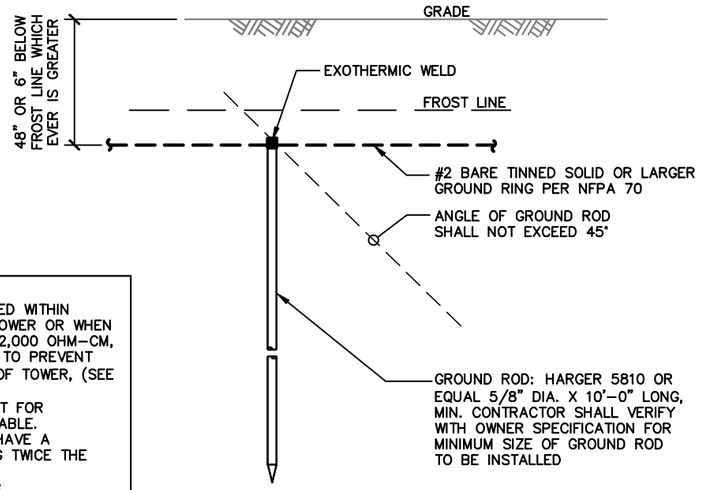

NOTES:
1. GROUND RODS INSTALLED WITHIN CLOSE PROXIMITY TO TOWER OR WHEN SOIL IS AT OR BELOW 2,000 OHM-CM, SHALL BE GALVANIZED TO PREVENT GALVANIC CORROSION OF TOWER, (SEE ANSI/TIA-EIA-222).
2. SEE RESISTIVITY REPORT FOR VERIFICATION AS AVAILABLE.
3. GROUND RODS SHALL HAVE A RECOMMENDED SPACING TWICE THE LENGTH OF ROD.
4. GROUND RODS MAY BE:
   -COPPER CLAD STEEL
   -SOLID COPPER
5. A LARGER CONDUCTOR SHALL BE REQUIRED IN AREAS HIGHLY PRONE TO LIGHTNING AND/OR AREAS WITH HIGHLY ACIDIC SOIL
6. GROUND RING SHALL BE INSTALLED AT GREATEST DEPTH POSSIBLE AND BELOW PERMANENT MOISTURE LEVEL.

GROUND ROD DETAIL

SCALE: NONE

1

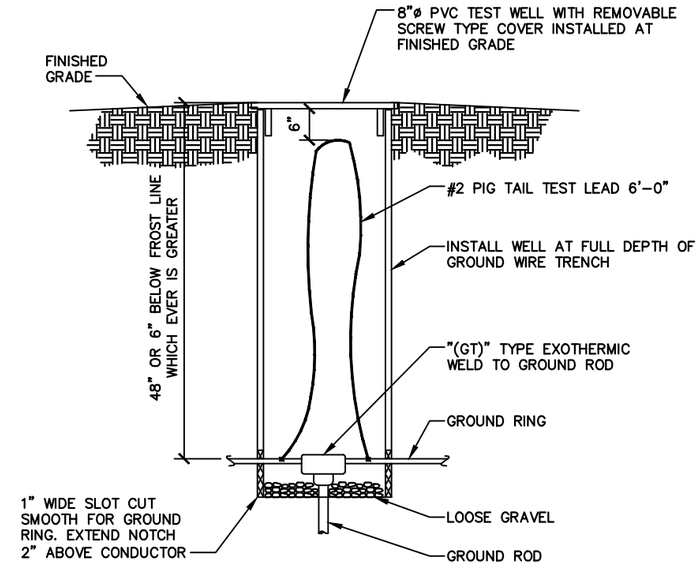

TEST WELL DETAIL

SCALE: NONE

2

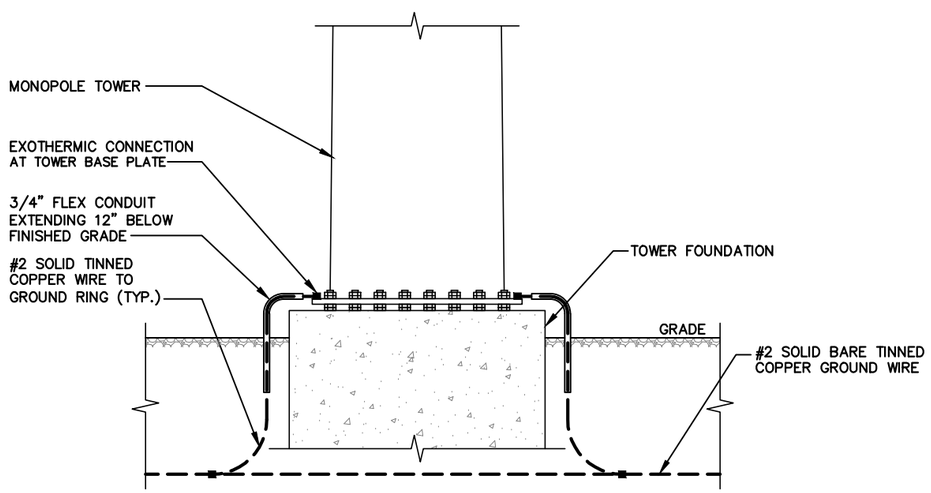

TOWER BASE GROUNDING

SCALE: NONE

3

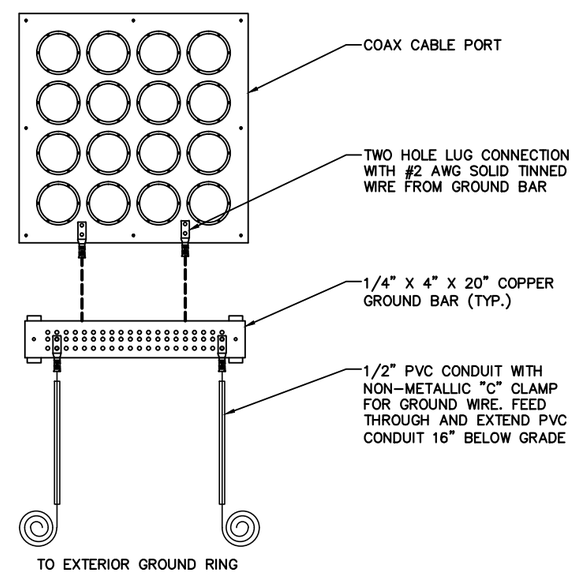

CABLE PORT DETAIL

SCALE: NONE

4

Parallel INFRASTRUCTURE

T-Mobile stick together
8550 BRYN MAWR AVENUE, SUITE 100
CHICAGO, ILLINOIS 60631

CelluSite, LLC

PLANS PREPARED BY:

W-T COMMUNICATION DESIGN GROUP, LLC.
WIRELESS INFRASTRUCTURE
2675 Pratum Avenue
Hoffman Estates, Illinois 60192
PH: (224) 293-6333 FAX: (224) 293-6444
www.wtengineering.com

COPYRIGHT © 2017 W-T COMMUNICATION DESIGN GROUP, LLC.

A&E LICENSE:

JEFFERY GUTOWSKY
PROFESSIONAL ENGINEER
STATE OF WISCONSIN
LICENSE # 0035509-006
EXPIRES: 07/31/2018 SIGNED: / /

REVISIONS:

DATE	DESCRIPTION	BY	REV
08/01/16	FOR CLIENT REVIEW	ATK	A
10/11/16	REVISIONS	RSM	B
01/03/17	REVISIONS	RSM	C
01/04/17	REVISIONS	RSM	D

SITE INFORMATION:

ML91104B

CHAPEL HILL RL

6131 W. CHAPEL HILL ROAD
MEQUON, WI 53097
OZAUKEE COUNTY

W-T PROJECT NUMBER:

T1601045

SHEET TITLE:

GROUNDING DETAILS

SHEET NUMBER:

G-3

Attachment: packet (2070 : CellusSite, LLC)

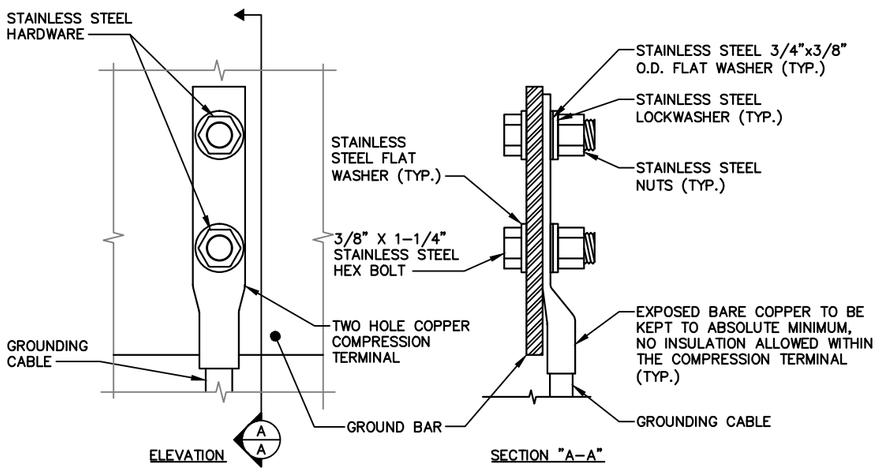

1. OXIDE INHIBITING COMPOUND TO BE USED AT ALL LOCATIONS
2. NO CRIMPING OF SOLID #2. USE EXOTHERMIC WELD ONLY

GROUND BAR CONNECTION DETAIL

SCALE: NONE

1

KEY NOTES:	
1.	1/4" THK ELECTRICAL TINNED GROUND BAR HARGER OR APPROVED EQUAL. HOLE CENTERS TO MATCH NEMA DOUBLE LUG CONFIGURATION
2.	INSULATORS (UNLESS NOTED OTHERWISE)
3.	3/8" STAINLESS STEEL LOCKWASHERS
4.	WALL MOUNTING BRACKET
5.	3/8" STAINLESS STEEL BNLF BOLTS
6.	EXOTHERMICALLY WELD #2 AWG BARE TINNED SOLID COPPER CONDUCTOR TO GROUND BAR. ROUTE CONDUCTOR TO BURIED GROUND RING AND PROVIDE PARALLEL EXOTHERMIC WELD
7.	CONTRACTOR SHALL USE PERMANENT MARKER TO DRAW THE LINES BETWEEN EACH SECTION AND LABEL EACH SECTION ("P", "A", "N", "I") WITH 1" HIGH LETTERS

NOTES:
1. EXTERIOR GROUND BARS TO BE TIN PLATED
2. HARDWARE SHALL BE STAINLESS STEEL
3. CONTRACTOR SHALL GROUP INCOMING WIRES
4. CONTRACTOR TO APPLY 'KOPR-SHIELD' TO ALL CONNECTIONS

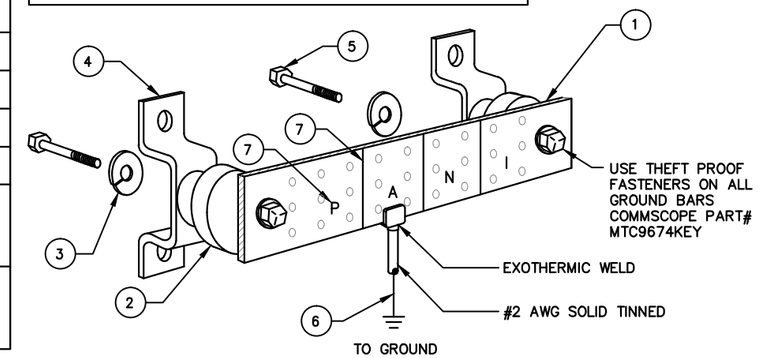

EACH GROUND CONDUCTOR TERMINATING ON ANY GROUND BAR SHALL HAVE AN IDENTIFICATION TAG ATTACHED AT EACH END THAT WILL IDENTIFY ITS ORIGIN AND DESTINATION

SECTION "P" – SURGE PRODUCERS

- COLLECTOR GROUND BAR
- GENERATOR FRAMEWORK (IF AVAILABLE)
- TELCO GROUND BAR
- COMMERCIAL POWER COMMON NEUTRAL/GROUND BOND
- FIBER GROUND BAR
- EQUIPMENT ROOM COLLECTOR GROUND BAR
- HVAC
- RECTIFIER FRAMES

SECTION "I" – ISOLATED GROUND ZONE

- ISOLATED EQUIPMENT FRAMES
- ISOLATED GROUND BAR – IGB

SECTION "A" – SURGE ABSORBERS

- INTERIOR GROUND RING
- EXTERNAL EARTH GROUND FIELD (BURIED GROUND RING)
- METALLIC COLD WATER PIPE (IF AVAILABLE)
- BUILDING STEEL (IF AVAILABLE)
- AC POWER

SECTION "N" – NON-ISOLATED GROUND ZONE EQUIPMENT

- MISCELLANEOUS NON-ISOLATED GROUND ZONE EQUIPMENT
- CABLE TRAY SYSTEM
- EQUIPMENT FRAMES
- BATTERY RACKS
- DC POWER

GROUND BAR DETAIL

SCALE: NONE

2

NOTE:
THE FOLLOWING SYMBOLS SHOWN ARE HARGER ULTRAWELD EXOTHERMIC CONNECTIONS WITH PART NUMBERS BELOW. THESE CONNECTIONS MAY BE CROSS-REFERENCED WITH CADWELD CONNECTIONS WHICH ARE SHOWN IN PARENTHESIS

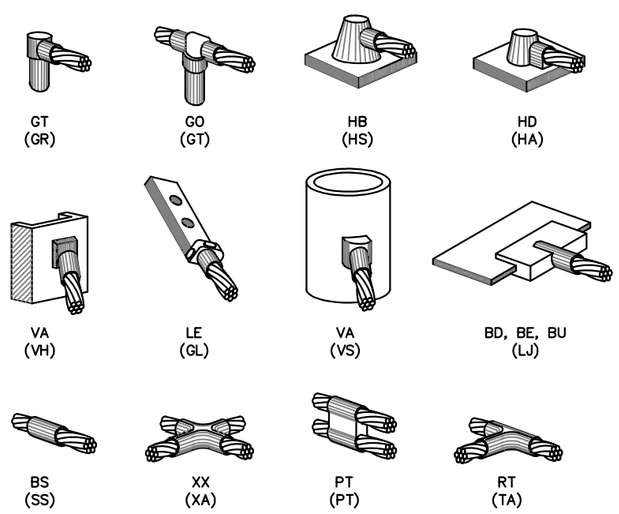

EXOTHERMIC WELD TYPES

SCALE: NONE

3

NOT USED

SCALE: NONE

4

Parallel INFRASTRUCTURE

T-Mobile stick together

8550 BRYN MAWR AVENUE, SUITE 100
CHICAGO, ILLINOIS 60631

CelluSite, LLC

PLANS PREPARED BY:

W-T COMMUNICATION DESIGN GROUP, LLC.
WIRELESS INFRASTRUCTURE
2675 Pratum Avenue
Hoffman Estates, Illinois 60192
PH: (224) 293-6333 FAX: (224) 293-6444
www.wtengineering.com

COPYRIGHT © 2017 W-T COMMUNICATION DESIGN GROUP, LLC.

A&E LICENSE:

JEFFERY GUTOWSKY
PROFESSIONAL ENGINEER
STATE OF WISCONSIN
LICENSE # 0035509-006
EXPIRES: 07/31/2018 SIGNED: / /

REVISIONS:

DATE	DESCRIPTION	BY	REV
08/01/16	FOR CLIENT REVIEW	ATK	A
10/11/16	REVISIONS	RSM	B
01/03/17	REVISIONS	RSM	C
01/04/17	REVISIONS	RSM	D

SITE INFORMATION:

ML91104B
CHAPEL HILL RL
6131 W. CHAPEL HILL ROAD
MEQUON, WI 53097
OZAUKEE COUNTY

W-T PROJECT NUMBER:

T1601045

SHEET TITLE:

GROUNDING DETAILS

SHEET NUMBER:

G-4

Attachment: packet (2070 : CelluSite, LLC)

NOTE:
NEW STRANDED GREEN GROUND LEAD WITHIN SHELTER MUST TRANSITION TO #2 SOLID PRIOR TO LEAVING SHELTER.

NOTE:
NEW GROUND TO BE RUN IN 1" FLEX WITH SILICONE ON TOP SIDE.

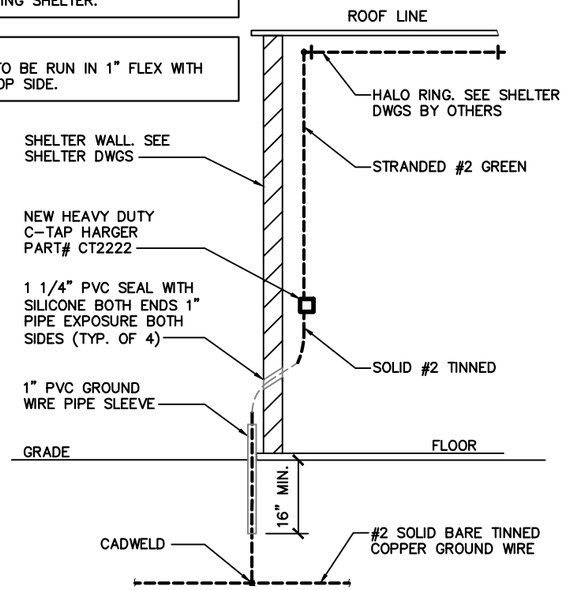

SHELTER TIE-IN

SCALE: NONE

1

NOTE:
NEW GROUND TO BE INSTALLED IN 1" PVC FROM GROUND POINT TO BELOW GRADE.

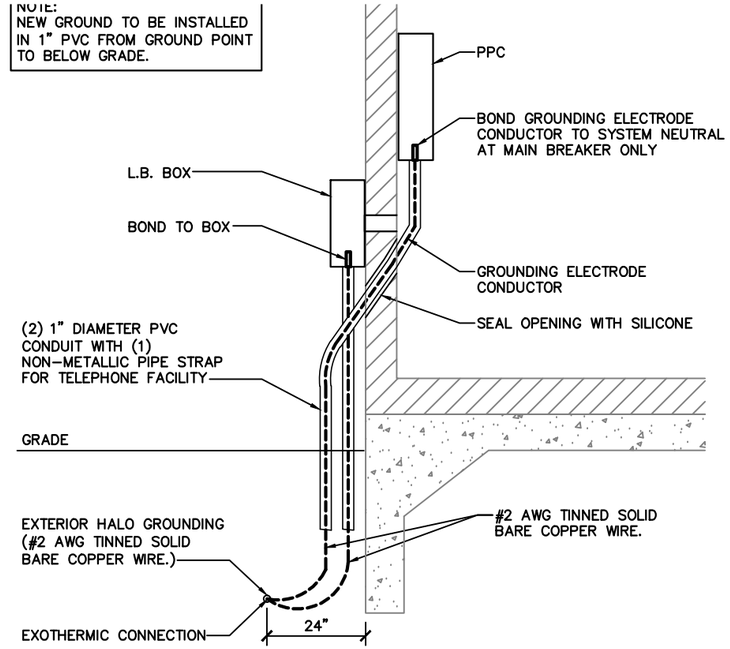

UTILITY GROUND DETAIL

SCALE: NONE

2

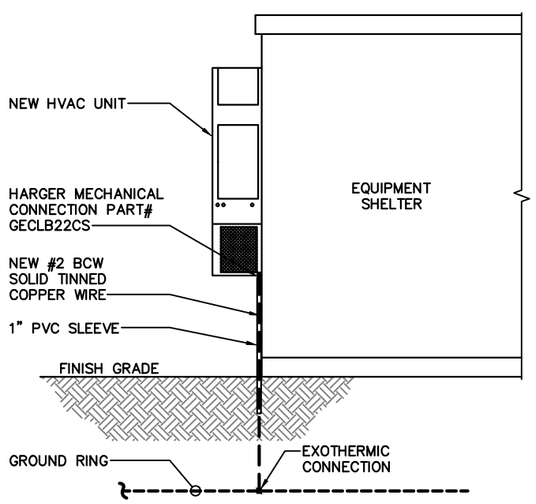

HVAC GROUNDING

SCALE: NONE

3

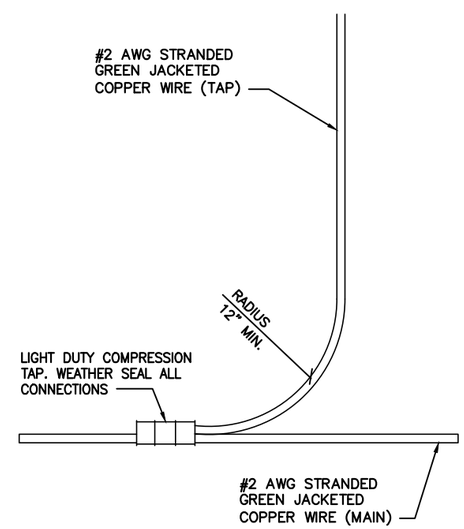

C-TAP CONNECTION

SCALE: NONE

4

Parallel INFRASTRUCTURE

T-Mobile stick together
8550 BRYN MAWR AVENUE, SUITE 100
CHICAGO, ILLINOIS 60631

CelluSite, LLC

PLANS PREPARED BY:

W-T COMMUNICATION DESIGN GROUP, LLC.
WIRELESS INFRASTRUCTURE
2675 Pratum Avenue
Hoffman Estates, Illinois 60192
PH: (224) 293-6333 FAX: (224) 293-6444
www.wtengineering.com

COPYRIGHT © 2017 W-T COMMUNICATION DESIGN GROUP, LLC.

A&E LICENSE:

JEFFERY GUTOWSKY
PROFESSIONAL ENGINEER
STATE OF WISCONSIN
LICENSE # 0035509-006
EXPIRES: 07/31/2018 SIGNED: / /

REVISIONS:

DATE	DESCRIPTION	BY	REV
08/01/16	FOR CLIENT REVIEW	ATK	A
10/11/16	REVISIONS	RSM	B
01/03/17	REVISIONS	RSM	C
01/04/17	REVISIONS	RSM	D

SITE INFORMATION:

ML91104B

CHAPEL HILL RL

6131 W. CHAPEL HILL ROAD
MEQUON, WI 53097
OZAUKEE COUNTY

W-T PROJECT NUMBER:

T1601045

SHEET TITLE:

GROUNDING DETAILS

SHEET NUMBER:

G-5

Attachment: packet (2070 : CellUSite, LLC)

ATTENTION GC THIS IS A TEMPORARY INSTALLATION THAT MAY REQUIRE USE OF A HOLE AUGER–AT NO CIRCUMSTANCE WHATSOEVER WILL THE GC BE ALLOWED TO POUR/PLACE CONCRETE AROUND THIS PORT–THIS IS A TEMPORARY INSTALLATION AND WILL REMOVED AT THE END OF THE PROJECT LIFE AT THE CONCLUSION OF THE WALK	OSHA CFR 1910 SPECIFIES THAT IF YOU HAVE EMPLOYEES OR CONTRACTORS WHO CLIMB HIGHER THAN SIX FEET THEY MUST BE TRAINED AND CERTIFIED IN FALL PROTECTION. IF THEY ARE NOT CERTIFIED, THEY MUST BE UNDER DIRECT ON–SITE SUPERVISION OF A CERTIFIED INDIVIDUAL, AND CLIMB 100% ATTACHED. IT IS THE CONTRACTOR'S RESPONSIBILITY TO CONSULT WITH ALL APPLICABLE OSHA RULES AND GUIDELINES PRIOR TO CONSTRUCTION START
ATTENTION GC 1) APPROVE LOCATION OF SIGN WITH T–MOBILE PROJECT MANGER AND LANDLORD REP. SIGN SHALL NOT POSE A TRIPPING HAZARD. GC SHALL BE RESPONSIBLE FOR PLACEMENT AND MAINTENANCE OF THE SIGN BOARD UNTIL THE CONCLUSION OF THE SITE WALK 2) MATERIAL SAFETY DATA SHEETS FOR ALL MATERIALS THAT ARE FURNISHED BY GC SHALL BE PLACED ON SITE	UTILITY NOTES: 1) CONTRACTOR TO VERIFY LOCAL UTILITY REQUIREMENTS FOR DEPTH SIZE & SEPARATION OF CONDUITS PRIOR TO INSTALLATION. NOTIFY CONSTRUCTION MANAGER IMMEDIATELY OF ANY DISCREPANCIES. 2) CONTRACTOR TO CALL UTILITY LOCATES 48 HRS PRIOR TO EXCAVATING FOR UNDERGROUND UTILITY LOCATIONS. LOCATION SURROUNDING EXCAVATED AREA MUST BE PRIVATELY LOCATED FOR NON–PUBLIC UTILITIES.

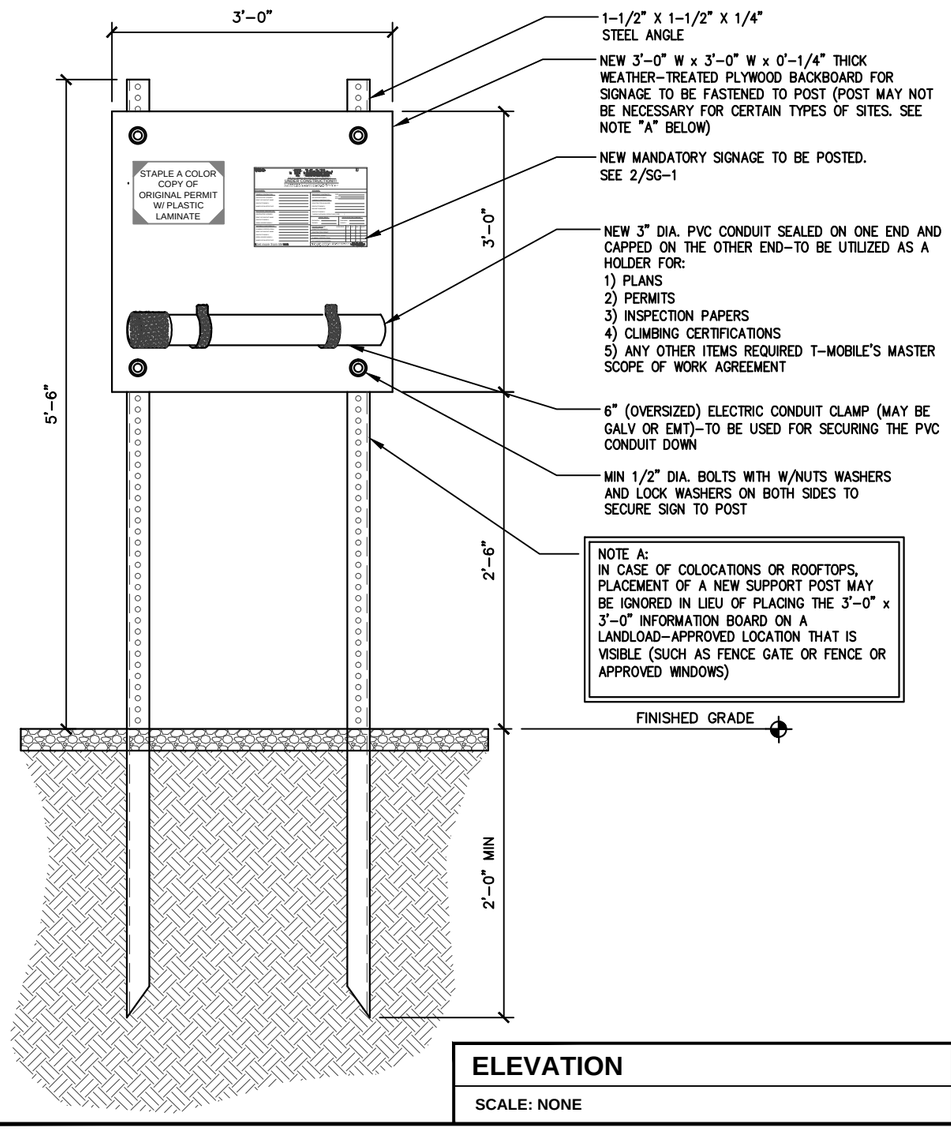

ELEVATION

SCALE: NONE

1

T·M·O· ·T·Mobile· ·U·S·A·

THIS IS A T-MOBILE USA FACILITY THAT IS CURRENTLY

UNDER CONSTRUCTION!!!

THE FOLLOWING INFORMATION IS SHALL BE POSTED BY THE GENERAL CONTRACTING FIRM THAT HAS BEEN AWARDED THE CONSTRUCTION FOR THIS SITE FAILURE TO POST TIS INFORMATION CONSTITUTES A VIOLATION OF THE MASTER SCOPE OF WORK AGREEMENT BETWEEN THE CONTRACTOR & T-MOBILE

SITE NUMBER: SITE NAME

GENERAL CONTRACTOR:
CONTRACTOR LICENSE#
POINT OF CONTACT NAME
CONTACT PHONE #
NAMES OF ON-SITE STAFF

ELECTRICAL CONTRACTOR:
CONTRACTOR LICENSE#
POINT OF CONTACT NAME
CONTACT PHONE #
CREW LEADER PHONE #

ANTENNA & LINE CREW CO:
CLIMBING CERTIFICATION#
POINT OF CONTACT NAME
CONTACT PHONE #
CREW LEADER PHONE #
NAMES OF ON-SITE STAFF

EMERGENCY CONTACTS — FIRE / POLICE / BOU
POLICE/FIRE PHONE#
T-MOBILE CONSTRUCTION
CONSTRUCTION MANAGER
CONTACT PHONE #
PROJECT MANAGER
CONTACT PHONE #
T-MOBILE NETWORK OPERATIONS (1-800- -)

LOCAL TELCO — ENGINEER: / PHONE #
LOCAL ELECTRIC COMPANY — ENGINEER: / PHONE #

ON-SITE CHECKLIST AVAILABLE:	YES	NO	N/A	DATE
PERMITTED DRAWINGS				
CONSTRUCTION PERMIT				
ELECTRICAL PERMIT				
CLIMBING CERTIFICATIONS				
CITY INSPECTION STICKERS				

IMPORTANT: GENERAL CONTRACTOR SHALL POST THIS MANDATORY SIGN ON THE SITE INFORMATION BOARD ALONG WITH THE MATERIALS FROM THE ABOVE NOTED CHECKLIST IN A VISIBLE AREA ON SITE

·Get more from life···· ·T·Mobile·

ON-SITE MANDATORY INFORMATION

SCALE: NONE

2

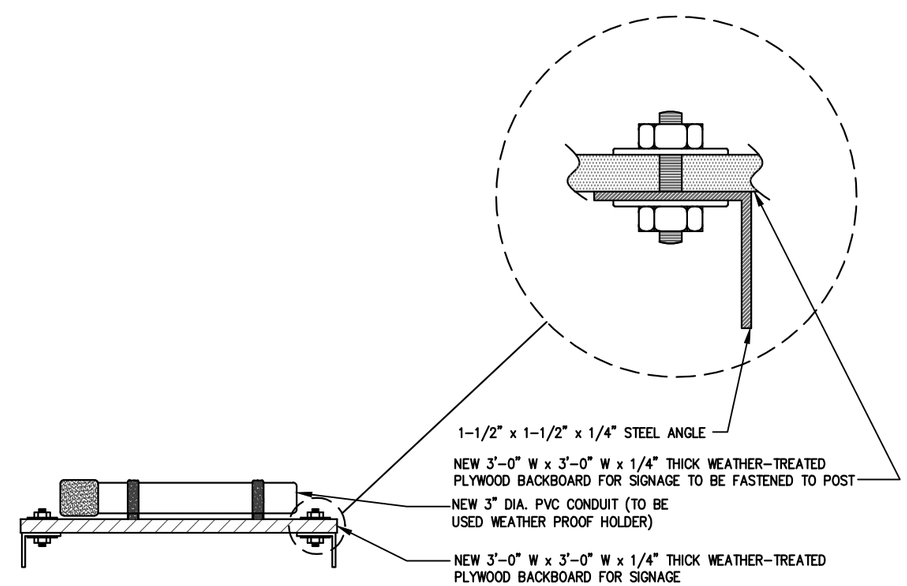

PLAN VIEW

SCALE: NONE

3

Parallel INFRASTRUCTURE

T·Mobile· stick together·
8550 BRYN MAWR AVENUE, SUITE 100
CHICAGO, ILLINOIS 60631

CelluSite, LLC

PLANS PREPARED BY:
W-T COMMUNICATION DESIGN GROUP, LLC.
WIRELESS INFRASTRUCTURE
2675 Pratum Avenue
Hoffman Estates, Illinois 60192
PH: (224) 293-6333 FAX: (224) 293-6444
www.wtengineering.com

COPYRIGHT © 2017 W-T COMMUNICATION DESIGN GROUP, LLC.

A&E LICENSE:

JEFFERY GUTOWSKY
PROFESSIONAL ENGINEER
STATE OF WISCONSIN
LICENSE # 0035509–006
EXPIRES: 07/31/2018 SIGNED: / /

REVISIONS:

DATE	DESCRIPTION	BY	REV
08/01/16	FOR CLIENT REVIEW	ATK	A
10/11/16	REVISIONS	RSM	B
01/03/17	REVISIONS	RSM	C
01/04/17	REVISIONS	RSM	D

SITE INFORMATION:

ML91104B

CHAPEL HILL RL

6131 W. CHAPEL HILL ROAD
MEQUON, WI 53097
OZAUKEE COUNTY

W-T PROJECT NUMBER: T1601045

SHEET TITLE: **OSHA SIGNAGE**

SHEET NUMBER: **SG-1**

State of Tennessee

1999 SBC (NS)

Seismic Information 1607.1.2. per 1999 SBC

1	Av=ø.4
2	Aa=ø.4
3	Group I
4	Seismic performance category-D.
5	S4 (site coefficient-2)
6	Bearing wall system - Reinforced concrete shear walls
7	"R"- 4 1/2 "Cd"- 4
8	Equivalent lotural force procedure (1607.4)

Code Classification	Occy	Constr
SBC - SBCCI NCSBC (NC)		
2001 FLORIDA BUILDING CODE 2001 FLORIDA FIRE PREVENTION CODE	S2	VI (u)
NBC - BOCA 2002-OBC (OH)	S2	5B
UBC - ICBO	S2	V (n)
IBC- INTERNATIONAL BUILDING CODE 2000	S2	VB
NATIONAL ELECTRICAL CODE - 2002		

ALL CODES LATEST APPROVED EDITION

Allowable Stresses

uniform floor load	125 psf
uniform roof live load	100 psf
wind load (including sliding and overturning moments)	120 mph
seismic A_a=0.4 A_v=0.4 (ZONE 4)	GROUP 1,CAT. "D"
estimated shipping weight	39,000 LBS
fire rating wall	2 hour
recommended foundation	272011-120 20

Seismic OBC

1. Seismic use group.	Group I (1604.5)
2. Spectral response coefficients S_{DS} & S_{D1} -	S_{DS} =0.3g S_{D1}=0.09g
3. Site class.	"D" (1615.1.1)
4. Basic seismic-force-resisting systems.	Bearing wall system (Ordinary reinforced concrete)
5. Design base shear.	Determine by: V=CsW
6. Analysis Procedure.	Minimum design lateral force. (section- 1617 OBC)

Field Notes:

Allowable stresses calculated using the recommended foundation while anchored with VFP-designated hardware. Uniform floor loading while being lifted is 125 psf.

This building shall not be permitted as an addition to another building if it will downgrade the construction type or, reduce the open perimeter of or otherwise jeopardize the other building's compliance with the requirements of Ch 5 & 6 of OBC.

This building is not designed to be located in a flood prone area.

Actual foundation concrete and steel design by others based on local soil conditions, subject to local codes. This building shall be located with a fire separation to comply with table 602 of the OBC.

g. Locate wedge anchor after building is located on foundation to correctly align with installed anchor plate. Refer to detail F, sh 6

h. This unit is approved for placement in Ohio only when: (1) The building official has determined that plumbing fixtures are to be installed at the site, or (2) The provisions of Section 2902 of the OBC are otherwise met, or (3) A variance from the provisions of Section 2902 or the OBC has been granted by the appropriate agency.

PP1 UTILITY 200A, 120/240VAC, 1ø/3W, 60Hz, M.BKR

LOAD	VOLT AMPERES (WATTS) A	VOLT AMPERES (WATTS) B	WIRE	BREAKER P	BREAKER TRIP			BREAKER TRIP	BREAKER P	WIRE	VOLT AMPERES (WATTS) A	VOLT AMPERES (WATTS) B	LOAD
ACH1	5400		6	2	60	1	2	-	2	-	-		SURGE ARRESTOR
		5400										-	
ACH2	5400		6	2	60	5	6	-	1	-	-		RECEPTACLE (GFCI) IN PP1
		5400					8	-	-	-		-	BLANK
POWER FAIL ALARM	-		12	2	15	9	10	15	1	12	240		LIGHTS -EXT/INT EMERG.
							12	-	-	-		-	BLANK
* RECTIFIER 1	1800		10	2	30	13	14	20	1	12	300		RECEPTACLE
		1800					16	20	1	12		540	RECEPTACLES
* RECTIFIER 2	1800		10	2	30	17	18	20	1	12	180		RECEPTACLE - EXTERIOR
		1800					20	-	-	-		-	BLANK
* RECTIFIER 3	1800		10	2	30	21	22	15	1	12	60		SMOKE DETECTOR
		1800					24	15	1	12		180	FAN , TIMER
* RECTIFIER 4	1800		10	2	30	25	26	30	2	10	-		FUTURE (RECTIFIER 7)
		1800										-	
FUTURE (RECTIFIER 5)	-		10	2	30	29	30	30	2	10	-		FUTURE (RECTIFIER 8)
		-					32					-	
FUTURE (RECTIFIER 6)	-		10	2	30	33	34	-	-	-	-		BLANK
							36	-	-	-		-	
BLANK	-		-	-	-	37	38	-	-	-	-		
		-	-	-	-	39	40	-	-	-		-	
	-		-	-	-	41	42	-	-	-	-		
VOLT AMPERES PER PHASE	18000	18000									780	720	VOLT AMPERES PER PHASE
* ASSUMED VOLT AMPERES						18780	18720						TOTAL VOLT AMPERES
						157	156						TOTAL AMPS PER PHASE
						197							AMPERES x125%

#10 GREEN GROUND WIRE PULLED FOR EACH RECTIFIER CIRCUIT

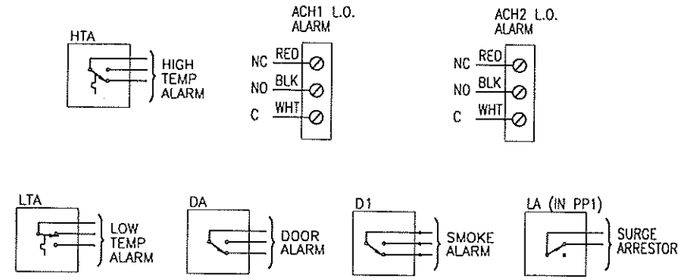

ALARM WIRING DIAGRAM

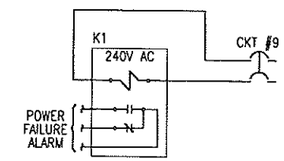

POWER FAIL ALARM

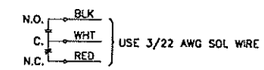

ALARM WIRE COLOR CODE

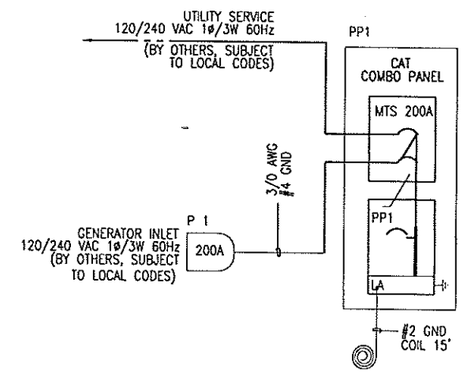

ONE-LINE WIRING DIAGRAM

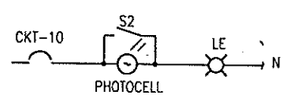

EXTERIOR LTG. CKT.

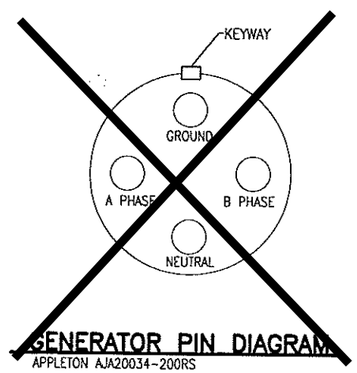

GENERATOR PIN DIAGRAM

APPLETON AJA20034-200RS

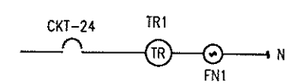

EXHAUST FAN WIRING

Index of Drawings

202583, sheet 1 *	Notes, Allowable Stresses, Service One-Line, Power Panel Schedule, Alarm Wiring Diagram, Revision Status
202583, sheet 2	Exterior Elevations
202583, sheet 3	Bill of Meterial
202583, sheet 4	Interior Foldout, Ceiling, Legend
202583, sheet 5	Grounding Details
202583, sheet 6 *	Construction Details
202583, sheet S1	Casting, Floor and Roof Plan
202583, sheet S2	Casting, Front and Rear Wall Plan
202583, sheet S3	Casting, Left and Right end wall plan
272011	Recommended Foundation

MIRRORED REFERENCE DRAWINGS

202583, sheet 2M	Exterior Elevations
202583, sheet 4M	Interior Foldout, Ceiling, Legend
202583, sheet S1M	Casting, Floor and Roof Plan
202583, sheet S2M	Casting, Front and Rear Wall Plan
202583, sheet S3M	Casting, Left and Right end wall plan

NOTES

1. REFER TO DWG. 101116 FOR GENERAL NOTES.
2. INSTALL HALO GROUND AS SHOWN ON SHEET 4 . REFER TO SHEET 5 FOR GROUNDING DETAILS.
3. REFER TO DWG. 473141 FOR HVAC CONTROL WIRING DIAGRAM (REDUNDANT). DO NOT INSTALL OPTIONAL ACTIVE DEHUMIDIFICATION WIRING.
4. FABRICATE TO THE MIRROR IMAGE OF THIS DRAWING WHERE REQUIRED BY ECN, SALES ORDER, OR NEW DRAWING RELEASE.
5. REFER TO SHEET NOTES ON SPECIFIC PAGES FOR ADDITIONAL INSTRUCTIONS.

PLAN NUMBER: VFPI-7

S3M	S2M	S1M		4M		2M	MIRROR SHEET
E	E	E		E		E	REVISION

REVISIONS

CHG. BY	APPR. BY	DATE	REV
RJG	SRS	3/7/02	A
UPDATE STATE CODES			
RJG	SRS	5/8/02	B
CHGE WGE / A/C'S			
FPW	SRS	01/21/02	C
CUSTOMER CHANGES			
FPW	SRS	06/09/03	D
ADDED LA ALARM			
RJG	W.J.B.	4/13/04	E
UPDATED DWGS STD.			

WILLIAM J. BLANKENSHIP, PE
5810 CRISPIN STREET, APT. 2G
ROANOKE, VIRGINIA 24019
PE LICENSE: STATE OF

VFP, INC.

CORPORATE OFFICE
176 EastPark Drive
Roanoke, Virginia 24019
(540)977-0500 (540)977-5555 fax

CONCRETE SHELTERS (PLANT #2)
4954 Industrial Park
Duffield, Virginia 24244
(276)431-4000 (276)431-4220 fax

Except as may otherwise be provided by contract, these drawings and concepts are the sole property of VFP, Inc., they are issued in strict confidence, and shall not be reproduced in whole or part without the written permission of VFP, Inc.

DRAWN BY R.GLASS/ B.CULLOP	DATE 9/11/01
CHECKED BY WJB	DATE 10/17/01
APPROVED BY SRS	DATE RELEASED 10/19/02
DO NOT SCALE DRAWING	
SIZE B / CAGE NO 53223	REV E
SCALE 1/4"=1'0"	MODEL 2583

TITLE: 10'0"x 20'0"x 9'2" CONCRETE SHELTER PANEL SCH./ONE LINE

DRAWING NO. 202583

Attachment: packet (2070 : CelluSite, LLC)

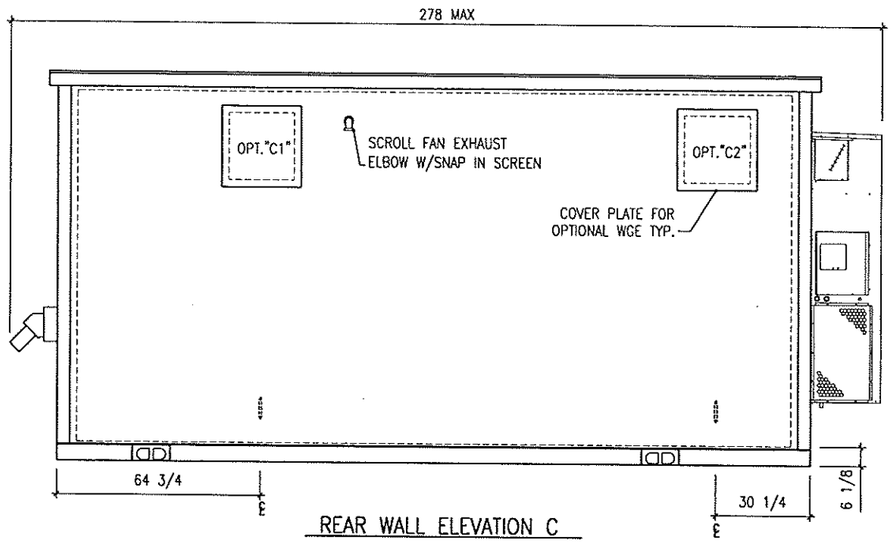

REAR WALL ELEVATION C

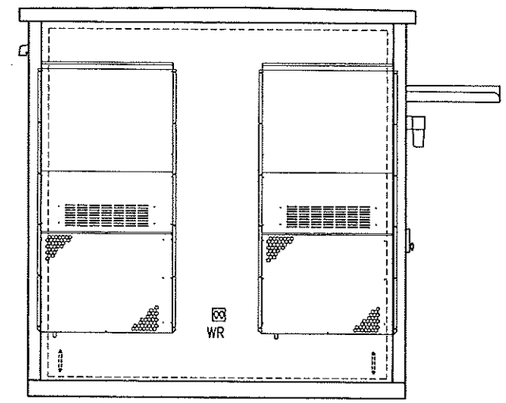

LEFT WALL ELEVATION B

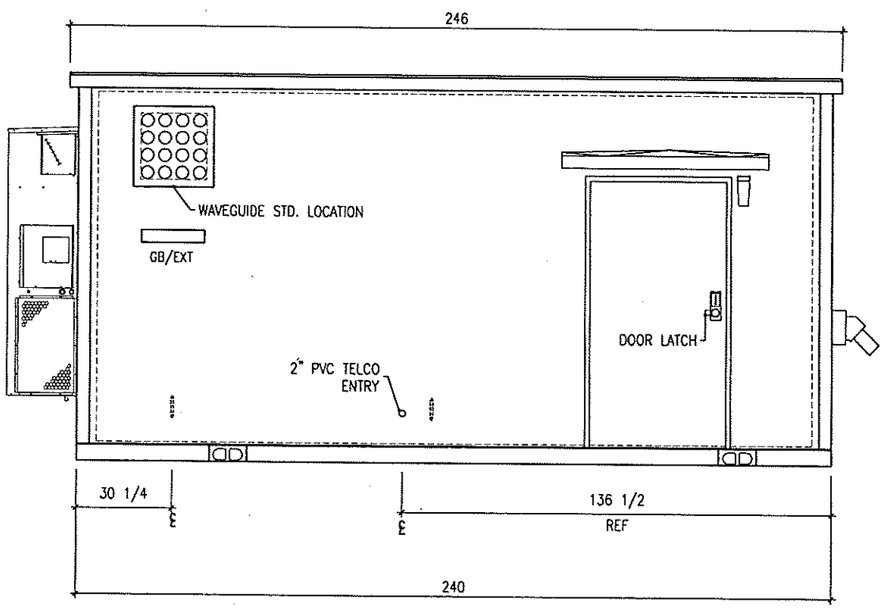

FRONT WALL ELEVATION A

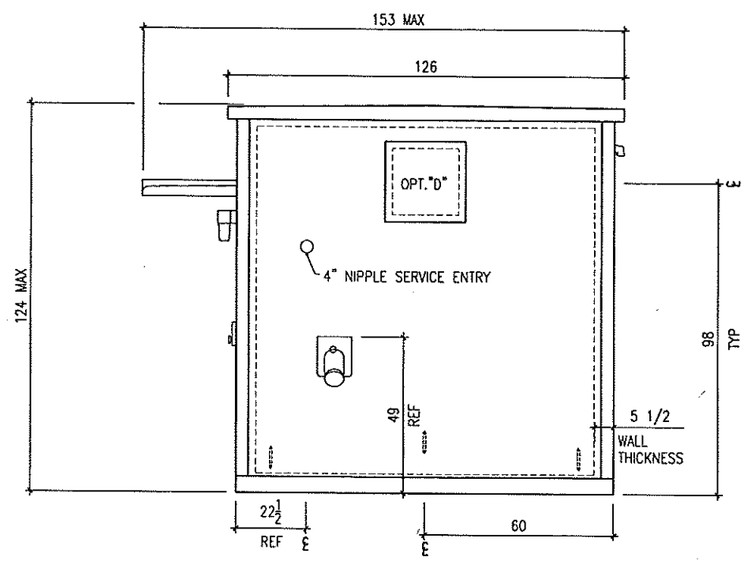

RIGHT WALL ELEVATION D

EXTERIOR ELEVATIONS

1. ELECTRICAL DIMENSIONS SHOWN ARE APPOXIMATE.
2. THE MEASUREMENTS MAY BE SLIGHTLY DIFFERENT TO CORRECTLY INSTALLED RIGID NIPPLES.

REVISIONS

CHG. BY	APPR. BY	DATE	REV
RJG	SRS	3/7/02	A
UPDATE STATE CODES & ADDRESS			
RJG	SRS	5/8/02	B
CHGE WGE / A/C'S			
FPW	SRS	01/21/02	C
CUSTOMER CHANGES			
RJG	W.J.B.	4/13/04	E
UPDATE DIM.			

WILLIAM J. BLANKENSHIP, PE
5810 CRISPIN STREET, APT. 2G
ROANOKE, VIRGINIA 24019
PE LICENSE: STATE OF

VFP, INC.

CORPORATE OFFICE
176 EastPark Drive
Roanoke, Virginia 24019
(540)977-0500 (540)977-5555 fax

CONCRETE SHELTERS (PLANT #2)
4954 Industrial Park
Duffield, Virginia 24244
(276)431-4000 (276)431-4220 fax

Except as may otherwise be provided by contract, these drawings and concepts are the sole property of VFP, Inc., they are issued in strict confidence, and shall not be reproduced in whole or part without the written permission of VFP, Inc.

DRAWN BY R.GLASS/ B.CULLOP	DATE 9/12/01
CHECKED BY WJB	DATE 10/17/01
APPROVED BY SRS	DATE RELEASED 10/19/01
DO NOT SCALE DRAWING	
SIZE B / CAGE NO 53223	REV E
SCALE 1/4"=1'0"	MODEL 2583
TITLE 10'0"x20'0"x9'2" CONCRETE SHELTER ELEVATIONS	
DRAWING NO. 202583	

Attachment: packet (2070 : CelluSite, LLC)

QTY	U/M	PART NO.	DESCRIPTION		ITEM
1	EA	160072-011	TELCO BOARD, GLASS BOARD		199
1	EA	301200-008	GROUND BAR 4x12	TGB	197
2	EA	301421-2	GROUND BAR 4x30 (BOTH IN SHIPPING)	GB	196
6	EA	4200-S6	INSULATOR, GROUND BAR (4-IN SHIPPING)		195
6	EA	301346-001	STANDOFF, GROUND BAR (4-IN SHIPPING)		194
1	EA	178092-001	LETTER HOLDER	LT	191
1	EA	195001-005	FIRST AID KIT	FK	190
1	EA	BCSS24	EYE WASH KIT / BATTERY SAFETY KIT	BSK	189
1	EA	195005-001	FIRE EXTING, CO2, 10#	FE	188
1	EA	MT-C7841-1447	WAVEGUIDE, 4", 4 x 4 (SHIP LOOSE)	WGE	183
4	EA	MT-C7684P	WAVEGUIDE COVER, B1447		182
1	EA	US24R40932D	DOOR BUMPER		180
1	EA	200NA-48	DOOR SWEEP, ALUM/NEOP., 48"		179
1	EA	301471-056	AWNING, 56W		178
1	EA	200NA-48	DOOR SWEEP, 48"		177
1	EA	355020-004	SPACER, DOOR ALARM		176
1	EA	355020-003	DOOR ALARM, MAG FORM 'C'	DA	175
1	EA	365020-001	DOOR CLOSURE, HYD		174
1	EA	165193-001	HOLDER, EXT. DOOR		173
2	EA	DJBFD-2-32D	STRIKE PLATE		172
1	EA	150022-002	GROUND STRAP, DOOR, 18L		171
1	EA	165046-003	LOCK, ELECTRONIC, PUSH BUTTON LEVERSET		170
.5	EA	265189-096	THRESHOLD, ANGLE, 6 X 42		169
1	EA	360014-052	FLASHING, AL, 1/2 X 2 X 52		168
1	EA	365357-1824	DOOR,GALV,UNIV,#23,42x84		167
1	EA	365358-4284	DOOR FRAME, 42 X 84, UNIV-LHR		166
3	EA	165411-001	HINGE,DOOR,SS,4",TAMPER PROOF,BB		165
2	EA	178133-001	GASKET,DOOR,BRONZE,3'x6'8"		164
1	EA	155046-001	LIGHT, EMERGENCY-EXIT 120/277 ,2LT 6VDC	LM	158
3	EA	355098-120	SWITCH, 1P, 20A	S1, S2, S3	155
2	EA	155015-001	SUPPRESSOR, BALLAST, 4LT		154
12	EA	155011-044	LAMP, FLUOR, 34W, C WHITE		153
6	EA	155016-004	FIXTURE, FLUOR, 2 TUBE, 4 FT	LF	152
1	EA	4C440	FAN, BLOWER SHADE PLOE 115V 3030RPM DAYTON		140
1	EA	195003-007	LIGHT FIXT, EXT, INCAN, 100W	LE	135
1	EA	195003-009	LIGHT, GLOBE, EXT, INCAN, LXN		134
1	EA	155012-075	LAMP, INCAND, 75W, 120V		133
1	EA	155017-001	PHOTO CELL,120V	PC	132
1	EA	0020032310	CABLE TRAY, 18" x 62"	CL	131
1	EA	0020032110	CABLE TRAY, 12" x 96"	CL	130
1	EA	0020032310	CABLE TRAY, 18" x 46 1/2"	CL	129
1	EA	0020032310	CABLE TRAY, 18" x 116 1/2"	CL	128
3	EA	0020032310	CABLE TRAY, 18" x 39"	CL	127
1	EA	0020032310	CABLE TRAY, 18" X 22"	CL	126
24	EA	301021-104	CABLE TRAY HANGER 16"	CLH	125
6	ST	350063-001	CABLE TRAY CORNER		124
1	ST	350062-001	CABLE TRAY SPLICER		123
1	EA	350075-208	NIPPLE, RGD, 4 X 8		112
2	EA	350075-080	NIPPLE, RGD, 3/4 X 8		111
4	EA	350075-060	NIPPLE, RGD, 1/2 X 8		110
3	EA	350075-050	NIPPLE, RGD, 1/2 X CHASE		109
8	PR	165335-101	END, CAPS, RUBBER		108
1	EA	350075-208	NIPPLE, RGD, 2 X 8		107
1	EA	176006-200	CONDUIT,PVC 2x8		106
1	EA	176008-200	COUPING, PVC, 2"		105
1	EA	350005-001	COVER,4 SQ,SGL SW		96
1	EA	350061-204	COVER, W/P, DUP, GFI		95
1	EA	350039-001	COVER, 4SQ, DBL SW		94
7	EA	350003-001	COVER, 4SQ, BLK		93
3	EA	350006-001	COVER, 4SQ, 1-DUP		92
1	EA	350007-001	COVER, 4SQ, 2-DUP		91

QTY	U/M	PART NO.	DESCRIPTION		ITEM
15	EA	350001-002	BOX, 4 SQ X 2-1/8D, 1/2-3/4 KO		84
2	EA	350002-001	BOX, 2-1/8 X 4, 1/2KO		83
1	EA	350059-103	BOX, 5-1/2 KO, W/P		82
1	EA	350091-003	ENCLOSURE, N1, NK, SC, 8 X 8 X 4		80
1	EA	350091-001	ENCLOSURE, N1, SC, 6 X 6 X 4		79
5	EA	355096-520	RECEPT, 20A, 125V, DUP		76
1	EA	355065-001	RECEPT, 20A, 125V, DUP,GFI		75
1	EA	355012-240	RELAY,10A DPDT, 8PIN	PFA	73
1	EA	5X852	SOCKET, RELAY, 8PIN		72
1	EA	350145-001	COVER, 4 SQ, PL RING, +5/8		- 63
1	EA	7100F	DETECTOR, SMOKE, 120 VAC	D1	62
2	EA	2E206	THERMOSTAT, HI/LO TEMP	HTA,LTA	48
1	EA	150079-024	24 HOUR TIMER	TR1	47
1	EA	LL357D2	THERMOSTAT, LEAD/LAG	T1	40
2	EA	DAH-30X10TB	GRILLE, AC, SUPPLY, 30 X 10		31
2	EA	DARH-30X16TB	GRILLE, AC, RETURN, 30 X 16		30
2	EA	360014-048	FLASHING, ALUM 145' 1 1/2 x 2 x 48		29
1	EA	WA602-A05XWXXXJ	A/C, 60,000 / 5 230V, 5KW	ACH2	28
1	EA	WL602-A05XWXXXJ	A/C, 60,000 / 5 230V, 5KW	ACH1	27
~~1~~	~~EA~~	~~[illegible]~~	~~RECEPTACLE, 250V, 3W+G, RG,~~	~~ONP~~	~~21~~
1	EA	350098-200	PLUG, CLOSE-OUT 2"		20
~~3~~	~~EA~~	~~Q0115~~	~~CKT BKR, 1/15A~~		~~9~~
~~3~~	~~EA~~	~~Q0120~~	~~CKT BKR, 1/20A~~		~~8~~
~~8~~	~~EA~~	~~Q0230~~	~~CKT BKR, 2/30A~~		~~7~~
~~2~~	~~EA~~	~~Q0260~~	~~CKT BKR, 2/60A~~		~~6~~
~~1~~	~~EA~~	~~Q0245~~	~~CKT BKR, 2/45A~~		~~5~~
~~1~~	~~EA~~	~~150508-1~~	~~CKT COMBO PANEL, 200A 1Ø/3W, BOLT-ON~~	~~PP1~~	~~2~~
QTY	U/M	PART NO.	DESCRIPTION		ITEM

NOTE:

ITEMS ARE SUBJECT TO CHANGE DUE TO AVAILABILITY AND EQUAL SUBSTITUTES WILL BE USED. ELECTRICAL OR MECHANICAL REQUIREMENTS MAY CHANGE DUE TO MANUFACTURER'S SPECIFICATIONS.

PLAN NUMBER: VFPI-7

REVISIONS			
CHG. BY	APPR. BY	DATE	REV
RJG	SRS	3/7/02	A
UPDATE STATE CODES & ADDRESS			
RJG	SRS	5/8/02	B
CHGE WGE / A/C'S			
FPW	SRS	01/21/02	C
CUSTOMER CHANGES			
RJG	W.J.B.	4/13/04	E
UPDATED PART #S			

WILLIAM J. BLANKENSHIP, PE
5810 CRISPIN STREET, APT. 2G
ROANOKE, VIRGINIA 24019
PE LICENSE: STATE OF

VFP, INC.

CORPORATE OFFICE
176 EastPark Drive
Roanoke, Virginia 24019
(540)977-0500 (540)977-5555 fax

CONCRETE SHELTERS (PLANT #2)
4954 Industrial Park
Duffield, Virginia 24244
(276)431-4000 (276)431-4220 fax

Except as may otherwise be provided by contract, these drawings and concepts are the sole property of VFP, Inc., they are issued in strict confidence, and shall not be reproduced in whole or part without the written permission of VFP, Inc.

DRAWN BY R.GLASS	DATE 9/11/01
CHECKED BY WJB	DATE 4/17/02
APPROVED BY SRS	DATE RELEASED 4/19/02
DO NOT SCALE DRAWING	
SIZE B	CAGE NO 53223 / REV E
SCALE 1/4"=1'0"	MODEL 2583
TITLE 10'0"x 20'0"x 9'2" CONCRETE SHELTER BILL OF MATERIAL	
DRAWING NO. 202583	

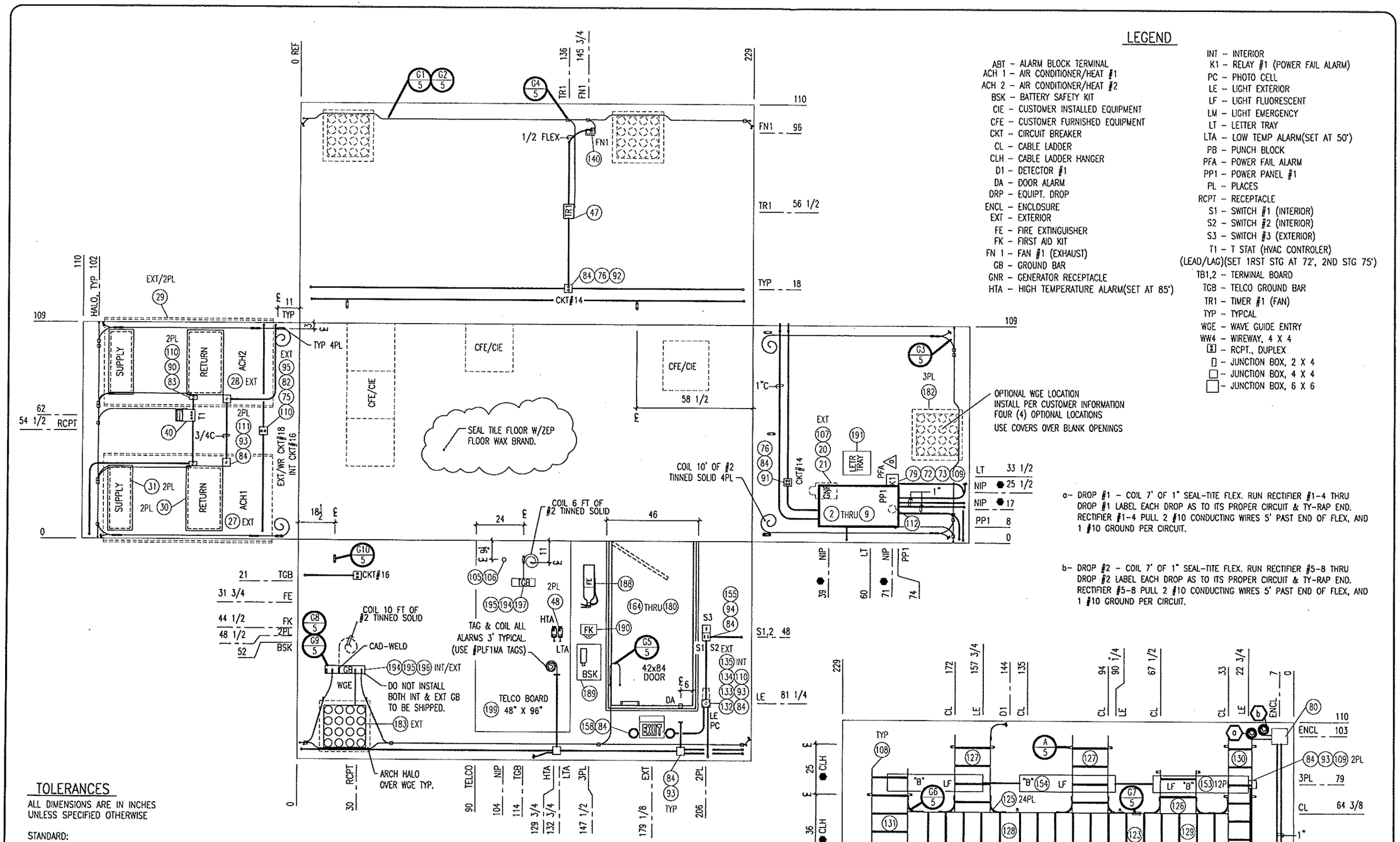

INTERIOR FOLDOUT

LEGEND

ABT – ALARM BLOCK TERMINAL
ACH 1 – AIR CONDITIONER/HEAT #1
ACH 2 – AIR CONDITIONER/HEAT #2
BSK – BATTERY SAFETY KIT
CIE – CUSTOMER INSTALLED EQUIPMENT
CFE – CUSTOMER FURNISHED EQUIPMENT
CKT – CIRCUIT BREAKER
CL – CABLE LADDER
CLH – CABLE LADDER HANGER
D1 – DETECTOR #1
DA – DOOR ALARM
DRP – EQUIPT. DROP
ENCL – ENCLOSURE
EXT – EXTERIOR
FE – FIRE EXTINGUISHER
FK – FIRST AID KIT
FN 1 – FAN #1 (EXHAUST)
GB – GROUND BAR
GNR – GENERATOR RECEPTACLE
HTA – HIGH TEMPERATURE ALARM(SET AT 85')
INT – INTERIOR
K1 – RELAY #1 (POWER FAIL ALARM)
PC – PHOTO CELL
LE – LIGHT EXTERIOR
LF – LIGHT FLUORESCENT
LM – LIGHT EMERGENCY
LT – LETTER TRAY
LTA – LOW TEMP ALARM(SET AT 50')
PB – PUNCH BLOCK
PFA – POWER FAIL ALARM
PP1 – POWER PANEL #1
PL – PLACES
RCPT – RECEPTACLE
S1 – SWITCH #1 (INTERIOR)
S2 – SWITCH #2 (INTERIOR)
S3 – SWITCH #3 (EXTERIOR)
T1 – T STAT (HVAC CONTROLER) (LEAD/LAG)(SET 1RST STG AT 72', 2ND STG 75')
TB1,2 – TERMINAL BOARD
TGB – TELCO GROUND BAR
TR1 – TIMER #1 (FAN)
TYP – TYPCAL
WGE – WAVE GUIDE ENTRY
WW4 – WIREWAY, 4 X 4
– RCPT., DUPLEX
– JUNCTION BOX, 2 X 4
– JUNCTION BOX, 4 X 4
– JUNCTION BOX, 6 X 6

a– DROP #1 – COIL 7' OF 1" SEAL-TITE FLEX. RUN RECTIFIER #1-4 THRU DROP #1 LABEL EACH DROP AS TO ITS PROPER CIRCUIT & TY-RAP END. RECTIFIER #1-4 PULL 2 #10 CONDUCTING WIRES 5' PAST END OF FLEX, AND 1 #10 GROUND PER CIRCUIT.

b– DROP #2 – COIL 7' OF 1" SEAL-TITE FLEX. RUN RECTIFIER #5-8 THRU DROP #2 LABEL EACH DROP AS TO ITS PROPER CIRCUIT & TY-RAP END. RECTIFIER #5-8 PULL 2 #10 CONDUCTING WIRES 5' PAST END OF FLEX, AND 1 #10 GROUND PER CIRCUIT.

TOLERANCES

ALL DIMENSIONS ARE IN INCHES UNLESS SPECIFIED OTHERWISE

STANDARD:
FRACTIONS ± 1/2"
DECIMALS ± 0.5"
ANGLES ± 3°

IF NOTED WITH SYMBOL:
▲ FRACTIONS ± 1/4"
DECIMALS ± 0.25"
ANGLES ± 1°

IF NOTED WITH SYMBOL:
● FRACTIONS ± 1"
DECIMALS ± 1.0"
ANGLES ± 5°

– TENNESSEE LABEL LOCATION.

PLAN NUMBER VFPI-7

REVISIONS			
CHG. BY	APPR. BY	DATE	REV
FPW	SRS	06/09/03	D
UPDATED STANDARDS			
RJG	W.J.B.	4/13/04	E
UPDATE PANEL SIZE			

WILLIAM J. BLANKENSHIP, PE
5810 CRISPIN STREET, APT. 2G
ROANOKE, VIRGINIA 24019
PE LICENSE: STATE OF

VFP, INC.

CORPORATE OFFICE
176 EastPark Drive
Roanoke, Virginia 24019
(540)977-0500 (540)977-5555 fax

CONCRETE SHELTERS (PLANT #2)
4954 Industrial Park
Duffield, Virginia 24244
(276)431-4000 (276)431-4220 fax

Except as may otherwise be provided by contract, these drawings and concepts are the sole property of VFP, Inc., they are issued in strict confidence, and shall not be reproduced in whole or part without the written permission of VFP, Inc.

DRAWN BY R.GLASS/ B.CULLOP		DATE 9/11/01
CHECKED BY WJB		DATE 4/17/01
APPROVED BY SRS		DATE RELEASED 4/19/01
DO NOT SCALE DRAWING		
SIZE B	CAGE NO 53223	REV E
SCALE 1/4"=1'0"	MODEL 2583	

TITLE
10'0"x 20'"x 9'2"
CONCRETE SHELTER
INTERIOR/REFLT. CEILING

DRAWING NO. 202583

Attachment: packet (2070 : CelluSite, LLC)

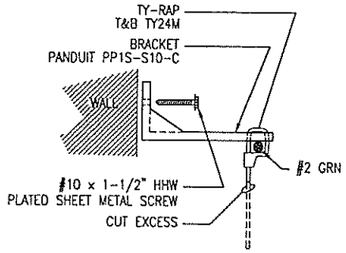

G1 HALO GROUND INSTALLATION
screw to interior wall @ 16" O.C., typ SCALE:

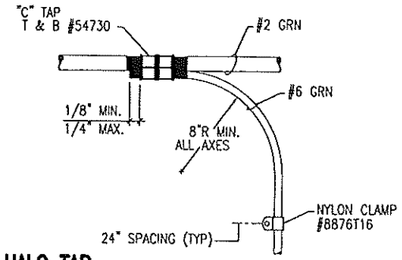

G4 HALO TAP
scale:

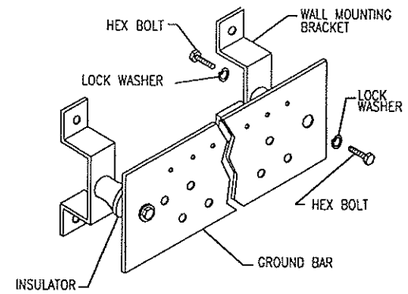

G9 GROUND BAR INSTALLATION

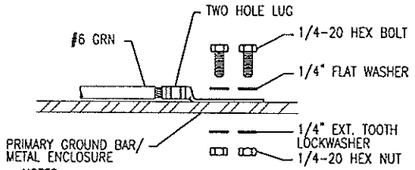

NOTES

a. SELECT BOLT LENGTH TO PROVIDE MINIMUM OF TWO THREADS EXPOSED.
b. BURNISH MOUNTING SURFACE TO REMOVE PAINT IN THE AREA OF THE LUG.
c. APPLY ANTI-OXIDANT COMPOUND TO MATING SURFACE OF LUG AND WIPE CLEAN EXCESS COMPOUND.
d. USE SOLID COPPER WIRE AND MECHANICAL 2 HOLE LUG FOR ALL EXTERIOR GROUNDING.

G8 GROUNDING CONNECTION
#6 GRN to interior ground bar SCALE:

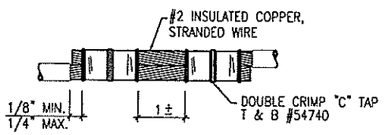

G2 HALO SPLICE
where required - only one permitted SCALE:

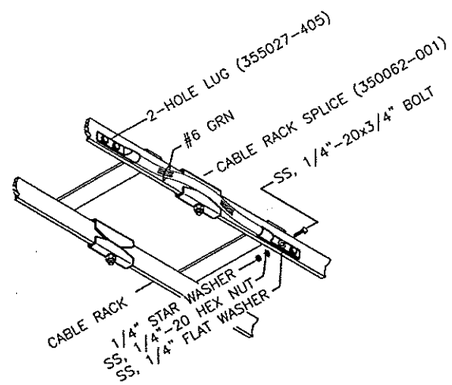

G7 CABLE LADDER BOND
extend across every ladder-ladder connection

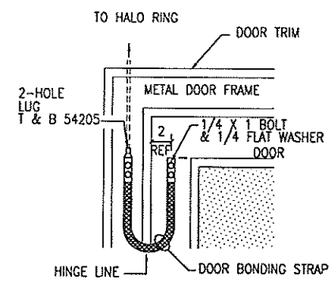

G5 DOOR BONDING STRAP
install on exterior doors

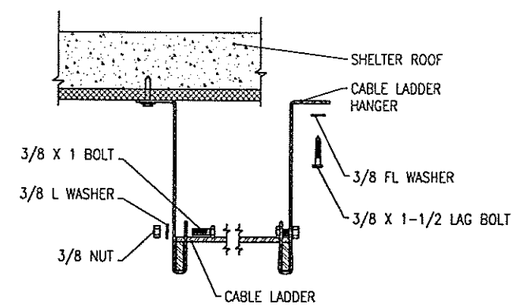

A CABLE LADDER INSTALLATION
vertical section - exploded assembly

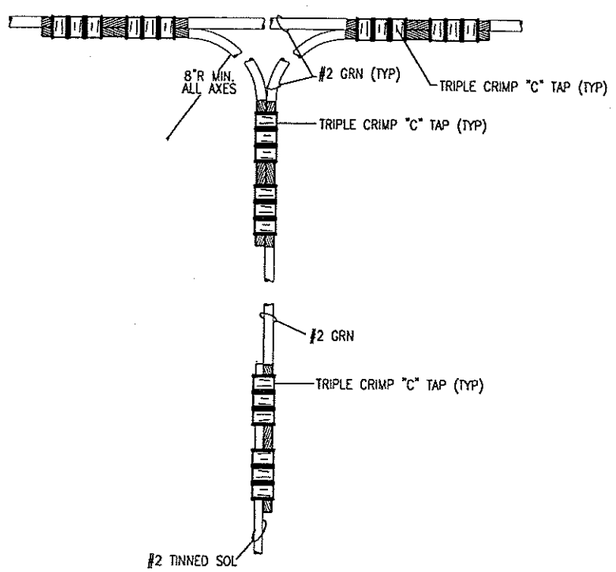

G3 BI-DIRECTIONAL HALO DROP
typical middle of long wall scale:

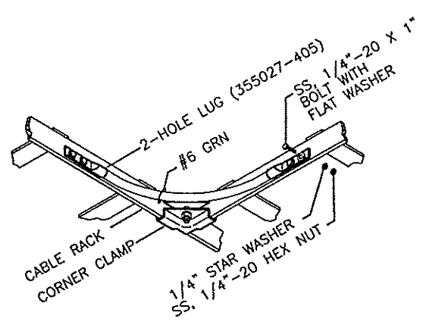

G6 CABLE LADDER CORNER BOND
extend across every ladder-ladder connection scale:

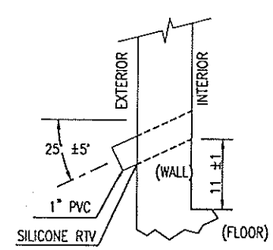

G10 PVC NIPPLE
installation detail

GROUNDING NOTES

a. APPLY "NO-OX" GREASE TO ALL GROUND BAR OR HALO GROUND CONNECTIONS; WIPE CLEAN ALL EXCESS.
b. MAKE ALL CONNECTIONS TO GROUND BARS WITH TWO-HOLE LUGS.
c. ALL GROUNDING HARDWARE SHALL BE BRASS EXCEPT WHERE NOTED OTHERWISE. SEE TABLE FOR VFP PART NUMBERS.

	1/4"	3/8"
BOLT	165019-203	165019-213
NUT	165004-205	165004-207
FLAT WASHER	165005-204	165005-206
LOCK WASHER	165025-204	165025-206
SHOULDER WASHER	165013-002	165013-001

d. TAPE ALL CRIMPS WITH GRN TAPE AFTER CRIMPING

REVISIONS

CHG. BY	APPR. BY	DATE	REV
RJG	[illegible]	3/7/02	A
UPDATE STATE CODES & ADDRESS			

WILLIAM J. BLANKENSHIP, PE
5810 CRISPIN STREET, APT. 2G
ROANOKE, VIRGINIA 24019
PE LICENSE: STATE OF

VFP, INC.

CORPORATE OFFICE
176 EastPark Drive
Roanoke, Virginia 24019
(540)977-0500 (540)977-5555 fax

CONCRETE SHELTERS (PLANT #2)
4954 Industrial Park
Duffield, Virginia 24244
(276)431-4000 (276)431-4220 fax

Except as may otherwise be provided by contract, these drawings and concepts are the sole property of VFP, Inc., they are issued in strict confidence, and shall not be reproduced in whole or part without the written permission of VFP, Inc.

DRAWN BY R.GLASS	DATE 9/12/01
CHECKED BY WJB	DATE 4/17/01
APPROVED BY SRS	DATE RELEASED 4/19/01
DO NOT SCALE DRAWING	
SIZE B	CAGE NO 53223 / REV A
SCALE 1/4"=1'0"	MODEL 2583

TITLE
10'0"x 20'0"x 9'2"
CONCRETE SHELTER
GROUNDING DETAILS

DRAWING NO. 202583

Attachment: packet (2070 : CelluSite, LLC)

Finishing Notes

a. Refer to Fastening Schedule Drawing #101562.

b. See door costing sheet for door frame size and swing. Refer to sheet 3 for full door descriptions and options.

c. Refer to manufacturing work order for exterior and interior finish of building. Refer to detail C this page for floor covering.

d. Refer to interior layout sheets before routing interior sheathing for miscellaneous openings.

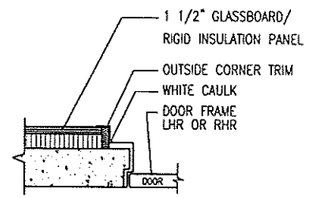

A DOOR OPENING

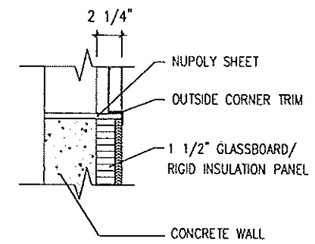

B WALL OPENING

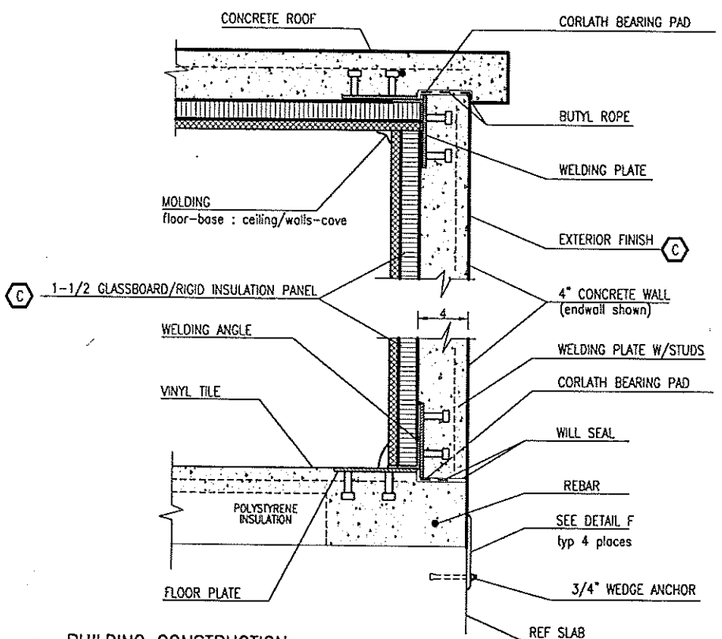

C BUILDING CONSTRUCTION
elevation cut-away

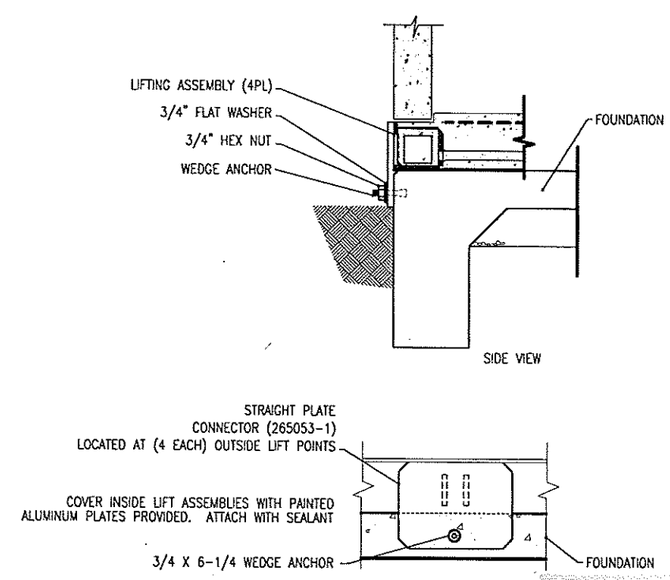

E BUILDING ATTACHMENT FIELD WORK
elevation cut away – from detail c

REVISIONS

CHG. BY	APPR. BY	DATE	REV
RJG	RJG	3/7/02	A
UPDATE STATE CODES & ADDRESS			
RJG	SRS	2/5/03	C
UPDATE CONSTR. DETAIL			
RJG	W.J.B.	4/13/04	E
UPDATE CONSTR. DETAIL			

WILLIAM J. BLANKENSHIP, PE
5810 CRISPIN STREET, APT. 2G
ROANOKE, VIRGINIA 24019
PE LICENSE: STATE OF

VFP, INC.

CORPORATE OFFICE
176 EastPark Drive
Roanoke, Virginia 24019
(540)977-0500 (540)977-5555 fax

CONCRETE SHELTERS (PLANT #2)
4954 Industrial Park
Duffield, Virginia 24244
(276)431-4000 (276)431-4220 fax

Except as may otherwise be provided by contract, these drawings and concepts are the sole property of VFP, Inc., they are issued in strict confidence, and shall not be reproduced in whole or part without the written permission of VFP, Inc.

DRAWN BY	DATE
R.GLASS	9/12/01
CHECKED BY WJB	DATE 4/17/01
APPROVED BY SRS	DATE RELEASED 4/19/01
DO NOT SCALE DRAWING	
SIZE B	CAGE NO 53223 / REV E
SCALE 1/4"=1'0"	MODEL 2583

TITLE
10'0"x 20'0"x 9'2"
CONCRETE SHELTER
CONSTRUCTION DETAILS

DRAWING NO. 202583

Attachment: packet (2070 : CelluSite, LLC)

NOTES:

1. GENERAL

1.1 All dimensions are specified in inches unless otherwise noted.

1.2 Design and installation of foundation by local engineer or architect. This is only a suggested foundation plan.

1.3 Foundation is designed for 2000 psf bearing. However, it is the customer's responsiblity to verify the adequacy of the foundation from soil boring data.

1.4 Slab type foundation is not recommended for areas with extreme frost conditions or where high water tables are present. These conditions could cause differential settlements in the soil beneath the foundation resulting in structural cracks.

(1.5) Perimeter footing must be a minimum foundation depth of 24" or per local frost line on undistrubed soil.

1.6 Locate wedge anchors after shelter is located on slab to correctly align with installed anchor plate. Do not install wedge anchor before setting shelter on foundation.

2. MATERIAL

2.1 Concrete shall have a minimum compressive strength of 3000 psi @ 28 days and shall be installed in accordance with the ACI-318 Building Code requirements for Reinforced Concrete.

2.2 Reinforcing bars shall conform to ASTM-A65 grade 60 specifications and be detailed in accordance with ACI-318

2.3 Test cylinders shall be molded and labortory cured in accordance with ASTM C31. Three cylinders shall be taken for each day's concrete placement. Cylinders shall be tested in accordance with ASTM C39.

3. TOLERANCES

3.1 Tops of concrete foundation must be within 0.02"per foot of elevation specified by the customer.

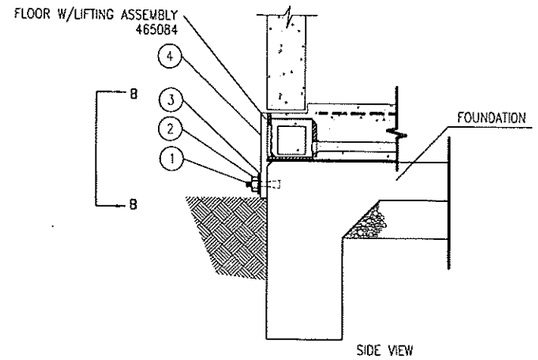

A BUILDING ATTACHMENT FIELD WORK
section view
SCALE: 1/2"=1'-0"

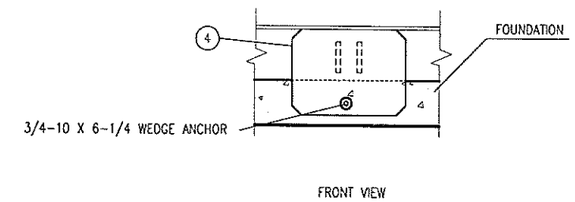

B TIE DOWN PLATE FIELD WORK
front view
SCALE: 3"=1'-0"

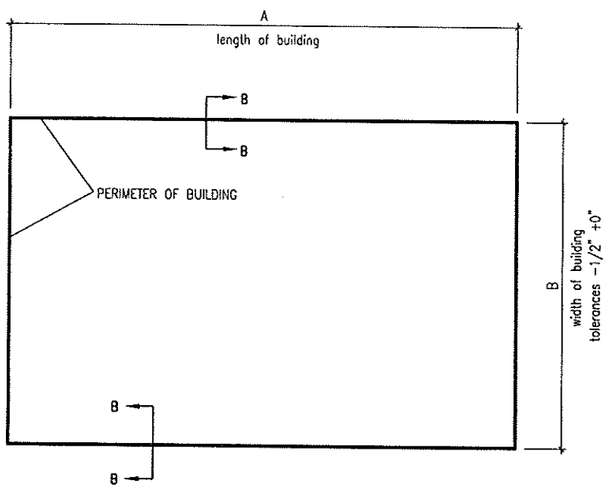

C FOUNDATION PLAN FIELD WORK
foundation plan view
SCALE: 1/4"=1'-0"

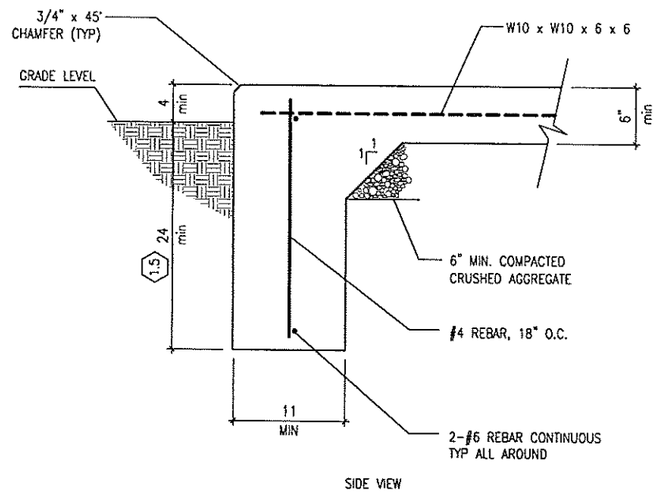

D CONTINUOUS PERIMETER FOOTING FIELD WORK
section view
SCALE: 3"=1'-0"

272011-096 36

WIDTH IN INCHES

LENGTH IN FEET

VFPI-11

B	4	EA	265053-1	PLATE, 9 x 12 x 1/2	4
B	4	EA	165005-009	FLAT WASHER, 3/4	3
B	4	EA	165032-002	HEX NUT, 3/4-10	2
B	4	EA	3A464	WEDGE ANCHOR, 3/4-10 x 6 1/4	1

RELEASED
JUL 7 2004
VFP, INC.
ENGINEERING

REVISIONS

CHG. BY	APPR. BY	DATE	REV
SRS	SRS	11/04/99	A
UPDATED TIE DOWN INFORMATION.			
FPW	[illegible]	03/01/02	B
UPDATED STANDARDS.			

VFP, INC.
CORPORATE OFFICE
176 EastPark Drive
Roanoke, Virginia 24019
(540)977-0500 (540)977-5555 fax

CONCRETE SHELTERS (PLANT #2)
4954 Industrial Park
Duffield, Virginia 24244
(276)431-4000 (276)431-4220 fax

Except as may otherwise be provided by contract, these drawings and concepts are the sole property of VFP, Inc., they are issued in strict confidence, and shall not be reproduced in whole or part without the written permission of VFP, Inc.

DRAWN BY B.A. BOTKIN	DATE 02/24/98
CHECKED BY S. SHUMATE	DATE 02/24/98
APPROVED BY S. SHUMATE	DATE RELEASED 06/25/98
DO NOT SCALE DRAWING	
SIZE B / CAGE NO 53223	REV B
SCALE 1/4"=1'0"	MODEL –

TITLE
SLAB FOUNDATION
GENERAL USE
FLAT PLATE TIE-DOWN

DRAWING NO. 272011

NOTES

1. ALL ELECTRICAL WORK TO COMPLY WITH THE LATEST REVISION OF THE N.E.C.
2. ALL CONTROL WIRING TO BE #18 AWG STRANDED UNLESS NOTED OTHERWISE.
3. WHERE HVAC SHUTDOWN IS REQUIRED BY BUILDING DRAWINGS, BREAK 'R' LEAD AT SECONDARY OF XFMR IN ACH UNITS AS SHOWN. SEE BUILDING DRAWING FOR ACTUAL WIRING OF THE HVAC SHUTDOWN RELAY. (DETAIL ON THIS DRAWING IS INCOMPLETE). SHUTDOWN RELAY SHALL BE SPECIFIED ON JOB PART LIST.
4. IF AC DOES NOT HAVE HEAT, WIRE IS NOT TO BE PULLED FROM "W" CONTACTS.
5. ACH UNIT POWER MUST BE IN PHASE BEFORE MAKING LOW VOLTAGE CONNECTIONS.
6. REMOVE GROUND STRAP (IF EXISTS) FROM ACH COMMON (XFMR SECONDARY) TO CHASSIS OR EQUIPMENT GROUND.

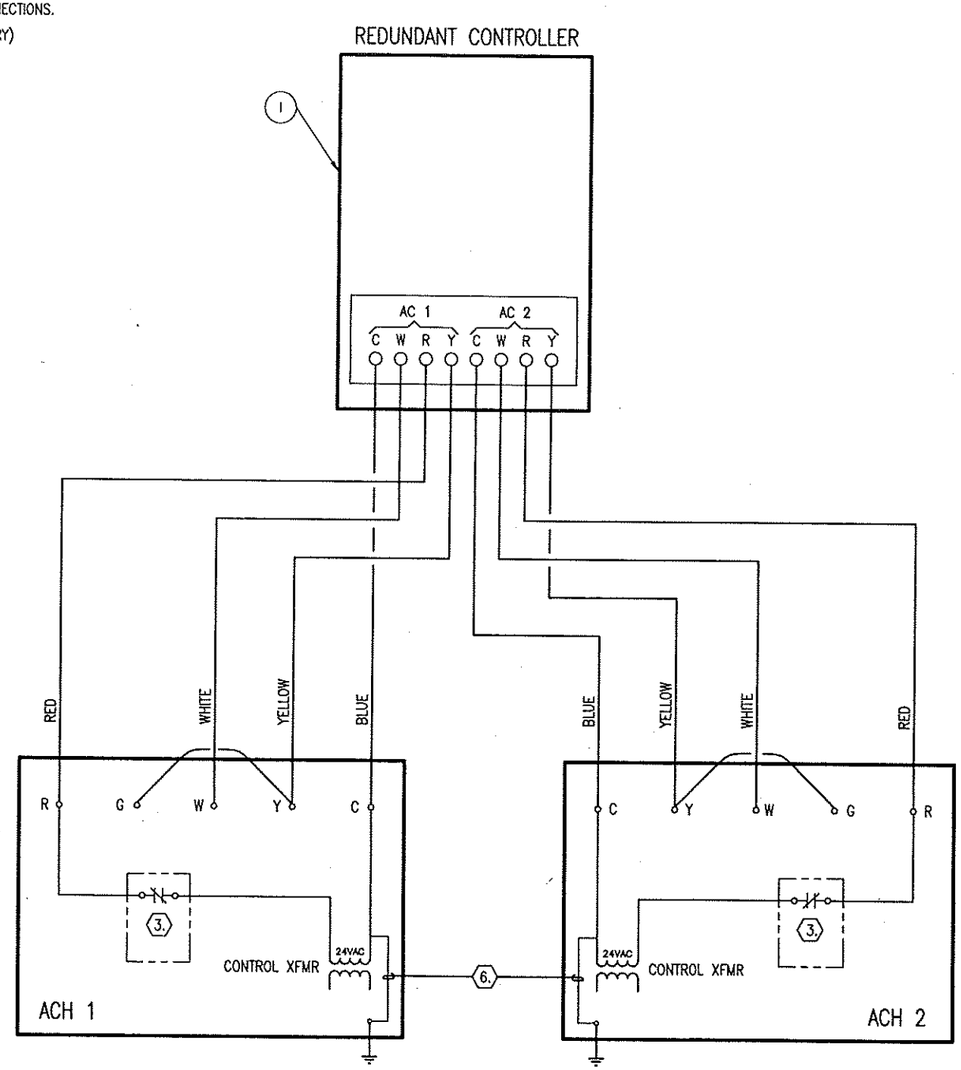

QTY. REQ'D	CAGE NO.	PART OR IDENTIFYING NO.	NOMENCLATURE OR DESCRIPTION	ITEM NO.
1		LL357 SERIES or TEC 20	THERMOSTAT, LEAD/LAG	1

REVISIONS

CHG. BY	APPR. BY	DATE	REV
	LUDUCA	05-17-95	A
ADDED NOTE #7			
SRS	WJB	01-04-02	B
UPDATED TO NEW STANDARDS			
FPW		11-14-03	C
UPDATED TO NEW STANDARDS			

VFP, INC.

CORPORATE OFFICE
176 EastPark Drive
Roanoke, Virginia 24019
(540)977-0500 (540)977-5555 fax

CONCRETE SHELTERS (PLANT #2)
4954 Industrial Park
Duffield, Virginia 24244
(276)431-4000 (276)431-4220 fax

Except as may otherwise be provided by contract, these drawings and concepts are the sole property of VFP, Inc., they are issued in strict confidence, and shall not be reproduced in whole or part without the written permission of VFP, Inc.

DRAWN BY: MALCOLM LYLE	DATE: 03-01-93
CHECKED BY: DAVID LODUCA	DATE: 03-03-93
APPROVED BY:	DATE RELEASED:
DRAWING NOT TO SCALE	
SIZE: B	CAGE NO: 53223 / REV: C
PLOT SCALE: 1/4"=1'0"	MODEL: –

TITLE: REDUNDANT HVAC CONTROL WIRING DIAGRAM WITH OPT. DEHUMIDIFICATION

DRAWING NO. 473141

RELEASED
JUL 7 2004
VFP, INC.
ENGINEERING

NOTES:

1. CAULK AROUND BOX WITH SEALANT PROVIDED TO CREATE A WATER TIGHT SEAL.
2. REQUIRED FIELD WIRING:
   a. REMOVE COVER PLATE TO EXPOSE WIRING.
   b. CONNECT CORRESPONDINGLY LABELED WIRES FROM THE BOX TO THE FIXTURE.
   c. MOUNT THE FIXTURE TO THE BOX USING THE HARDWARE PROVIDED.

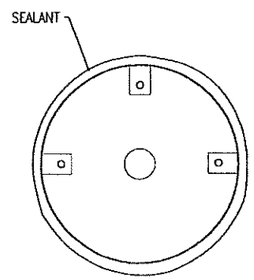

FRONT VIEW OF BOX
(ROUND BOX SHOWN)

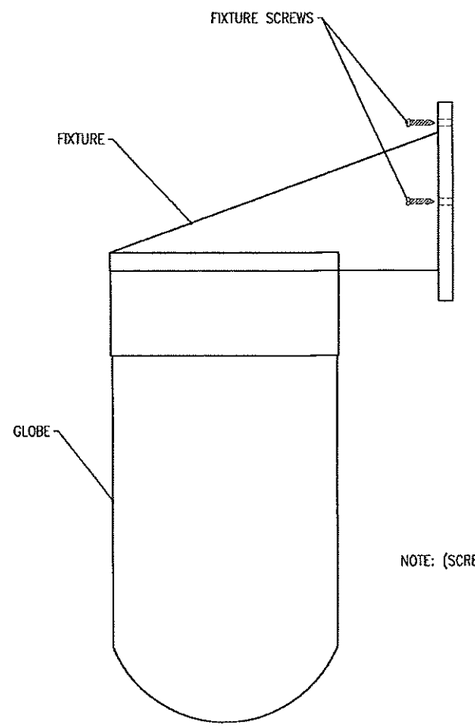

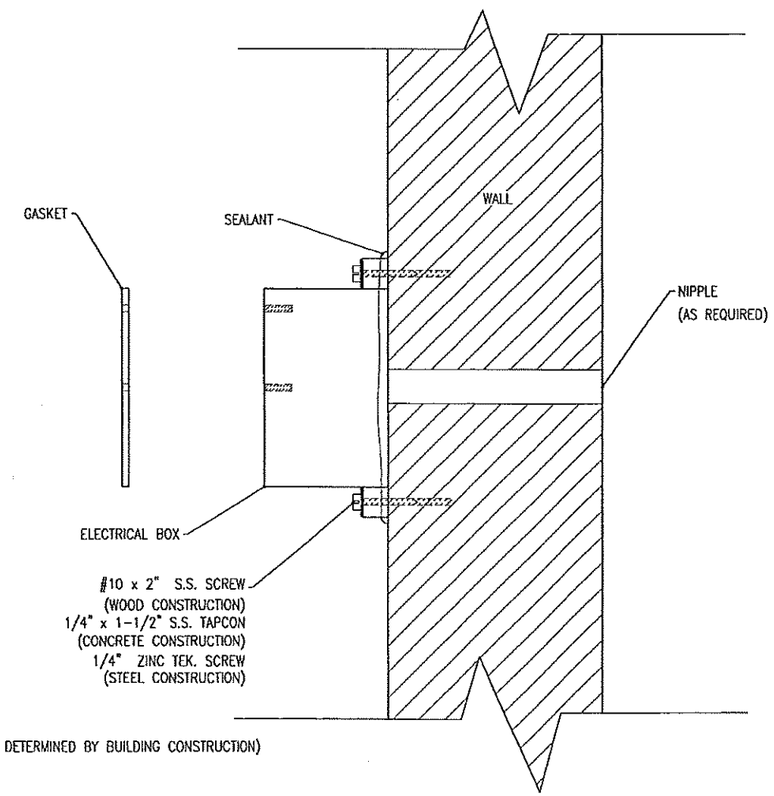

NOTE: (SCREW LENGTH DETERMINED BY BUILDING CONSTRUCTION)

SIDE VIEW OF LIGHT ASSEMBLY

STANDARD EXTERIOR LIGHT ASSEMBLY SHOWN,
(DETAIL IS REFERENCED FOR OTHER FIXTURES.)

REVISIONS			
CHG. BY	APPR. BY	DATE	REV
JVP		06/01/01	A
UPDATED NOTES.			
FPW		03/27/02	B
UPDATED STANDARDS.			

VFP, INC.

CORPORATE OFFICE
176 EastPark Drive
Roanoke, Virginia 24019
(540)977-0500 (540)977-5555 fax

CONCRETE SHELTERS (PLANT #2)
4954 Industrial Park
Duffield, Virginia 24244
(276)431-4000 (276)431-4220 fax

Except as may otherwise be provided by contract, these drawings and concepts are the sole property of VFP, Inc., they are issued in strict confidence, and shall not be reproduced in whole or part without the written permission of VFP, Inc.

DRAWN BY ROD B./BILL C.	DATE 09/14/99
CHECKED BY S.SHUMATE	DATE 09/30/99
APPROVED BY S.SHUMATE	DATE RELEASED 09/30/99
DO NOT SCALE DRAWING	
SIZE B / CAGE NO 53223	REV B
SCALE 1/4"=1'0"	MODEL —
TITLE EXTERIOR LIGHT INSTALLATION GENERAL USE	
DRAWING NO. 277005	
SHEET 1 OF 1	

NOTES:

1. APPLY SEALANT TO HOOD.
   (AS SHOWN IN DETAIL TO THE LEFT)
2. MOUNT HOOD TO PRE-DRILLED HOLES WITH APPROPRIATE FASTENERS.
   (SEE SECTION THRU)
   REMOVE ANY EXCESS SEALANT.
3. AFTER FASTENING HOOD IN PLACE, APPLY A BEAD OF SEALANT TO THE EDGE OF THE HOOD SEALING IT TO THE SHELTER.
   REMOVE ANY EXCESS SEALANT.
   (AS SHOWN IN FRONT VIEW TO THE LEFT)

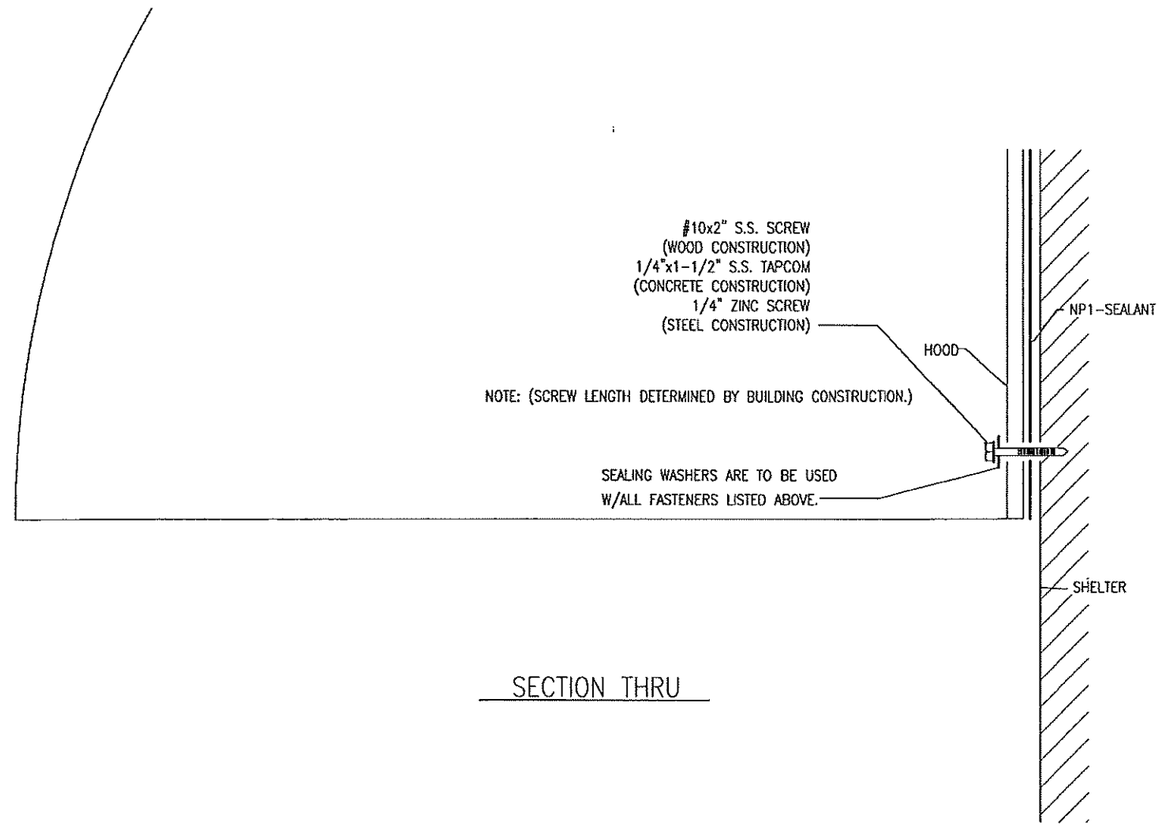

SECTION THRU

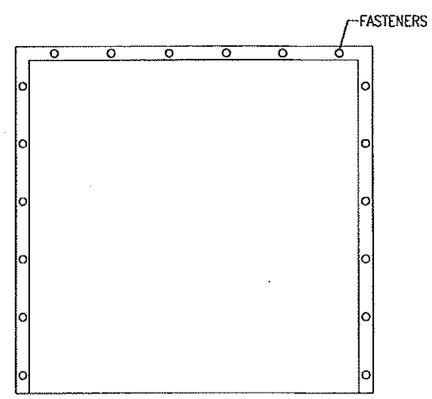

FRONT VIEW-HOOD MOUNTING

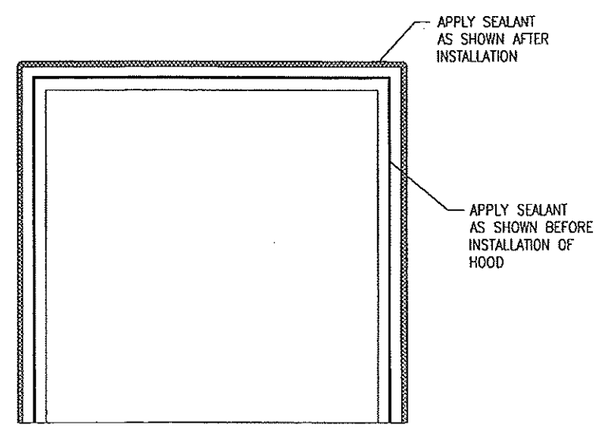

FRONT VIEW-HOOD SEALING

REVISIONS			
CHG. BY	APPR. BY	DATE	REV
	SRS	01/10/01	A
UPDATED FASTENING INFO.			
JVP	SRS	06/01/01	B
UPDATED BDR. & FASTENING INFO.			
FPW		06/25/02	C
UPDATED STANDARDS.			

VFP, INC.

CORPORATE OFFICE
176 EastPark Drive
Roanoke, Virginia 24019
(540)977-0500 (540)977-5555 fax

CONCRETE SHELTERS (PLANT #2)
4954 Industrial Park
Duffield, Virginia 24244
(276)431-4000 (276)431-4220 fax

Except as may otherwise be provided by contract, these drawings and concepts are the sole property of VFP, Inc., they are issued in strict confidence, and shall not be reproduced in whole or part without the written permission of VFP, Inc.

DRAWN BY T.SCOTT/WEC	DATE 09/13/99
CHECKED BY S.SHUMATE	DATE 10/02/99
APPROVED BY S.SHUMATE	DATE RELEASED 10/02/99
DO NOT SCALE DRAWING	
SIZE B / CAGE NO 53223	REV C
SCALE 1/4"=1'0"	MODEL –
TITLE STANDARD HOOD MOUNTING GENERAL USE	
DRAWING NO. 277006	
SHEET 1 OF 1	

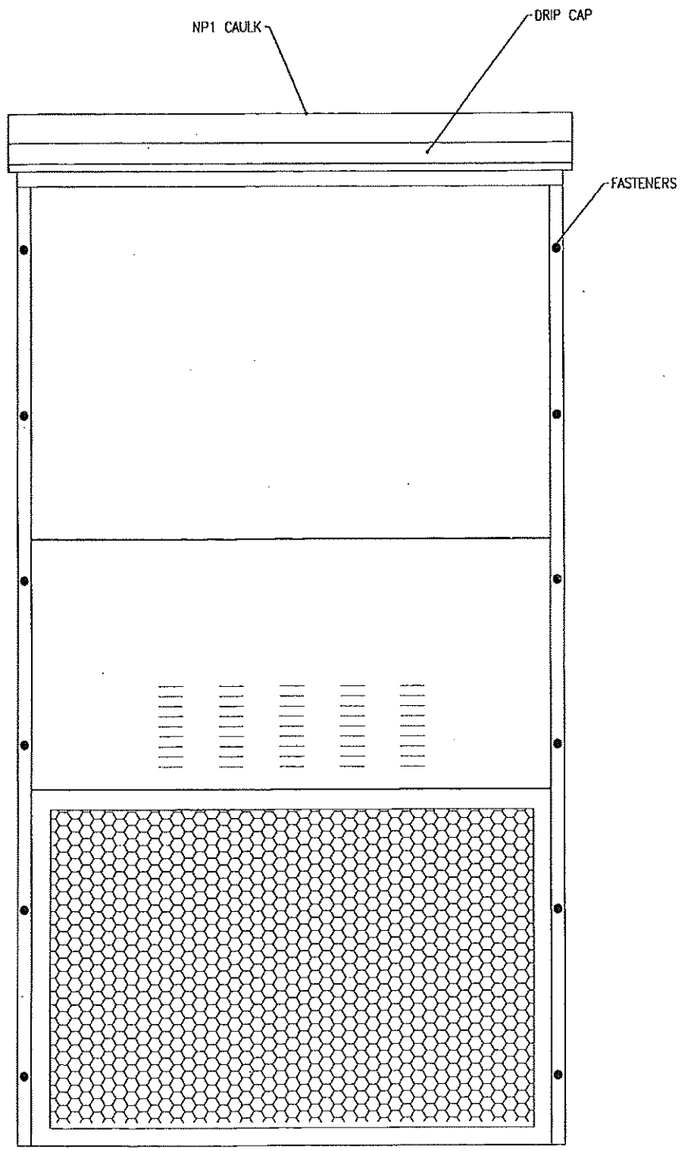

FRONT VIEW

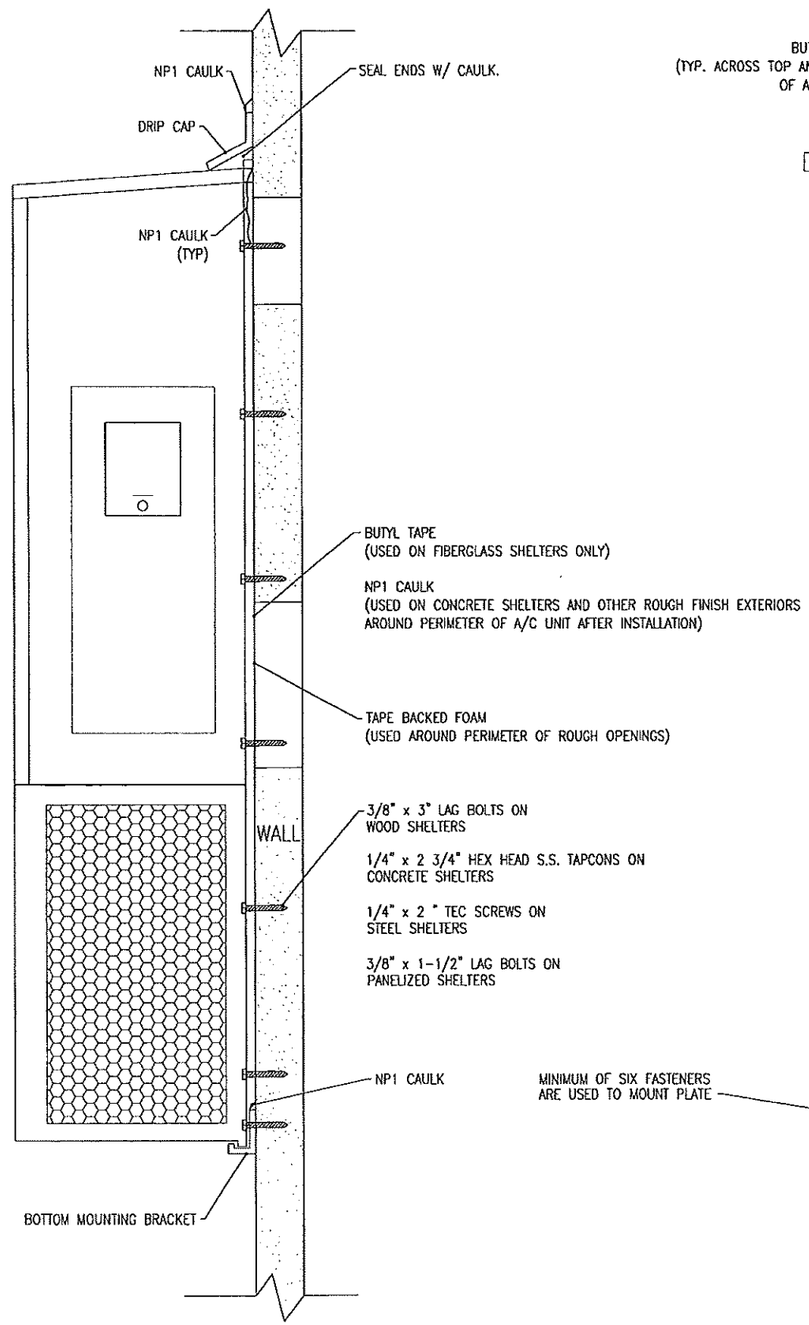

SIDE SECTION

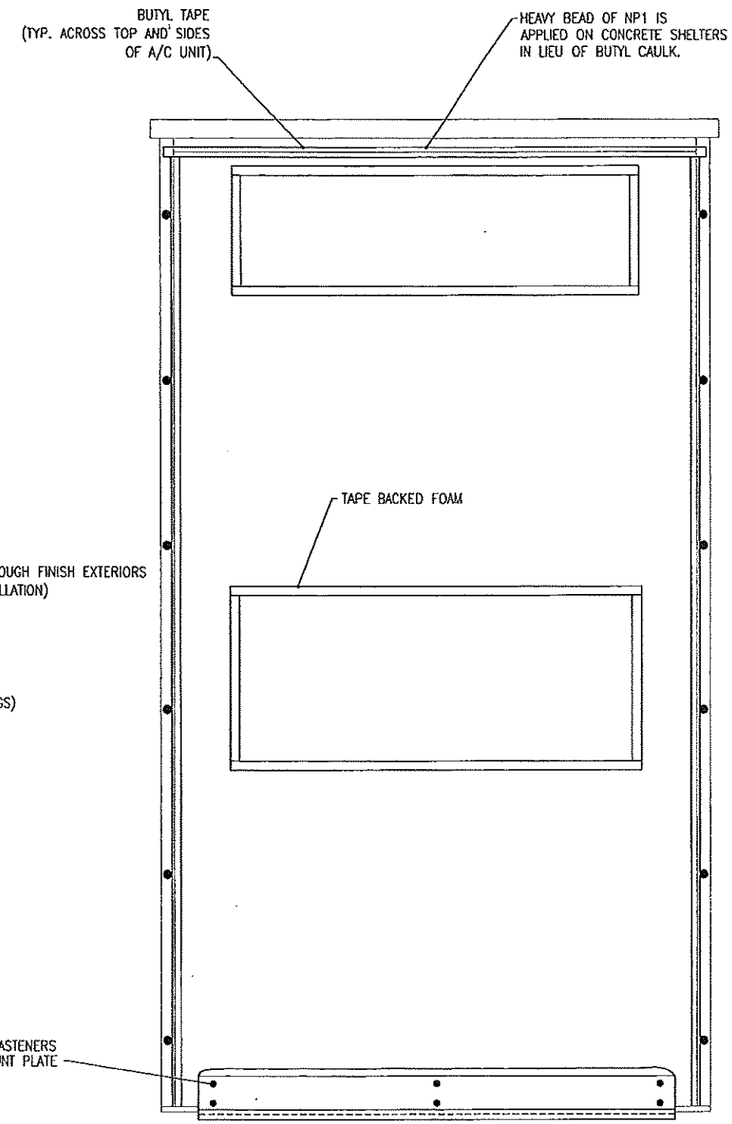

FRONT VIEW OF A/C UNIT

REVISIONS			
CHG. BY	APPR. BY	DATE	REV
JVP	SRS	06/05/01	A
REVISED DRIP CAP & MNTG. BRACKET.			
FPW	SRS	03/27/02	B
UPDATED STANDARDS.			

VFP, INC.

CORPORATE OFFICE
176 EastPark Drive
Roanoke, Virginia 24019
(540)977-0500 (540)977-5555 fax

CONCRETE SHELTERS (PLANT #2)
4954 Industrial Park
Duffield, Virginia 24244
(276)431-4000 (276)431-4220 fax

Except as may otherwise be provided by contract, these drawings and concepts are the sole property of VFP, Inc., they are issued in strict confidence, and shall not be reproduced in whole or part without the written permission of VFP, Inc.

DRAWN BY ROD B.	DATE 01/12/00
CHECKED BY S.SHUMATE	DATE 03/02/00
APPROVED BY S.SHUMATE	DATE RELEASED 03/02/00
DO NOT SCALE DRAWING	
SIZE B / CAGE NO 53223	REV B
SCALE 1/4"=1'0"	MODEL –

TITLE: STANDARD A/C INSTALLATION GENERAL USE

DRAWING NO. 277007

SHEET 1 OF 2

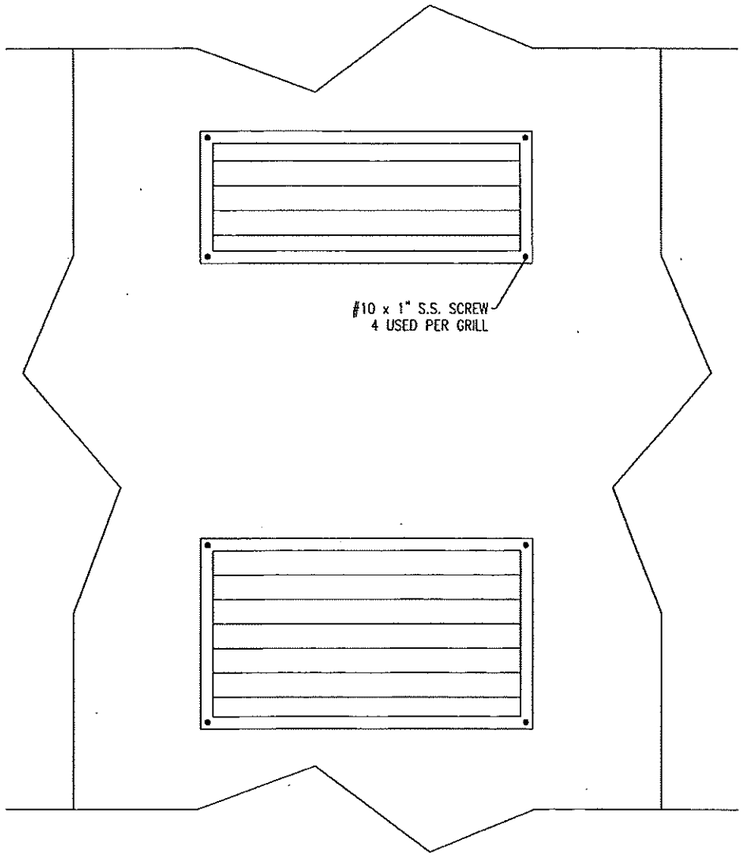

INTERIOR VIEW

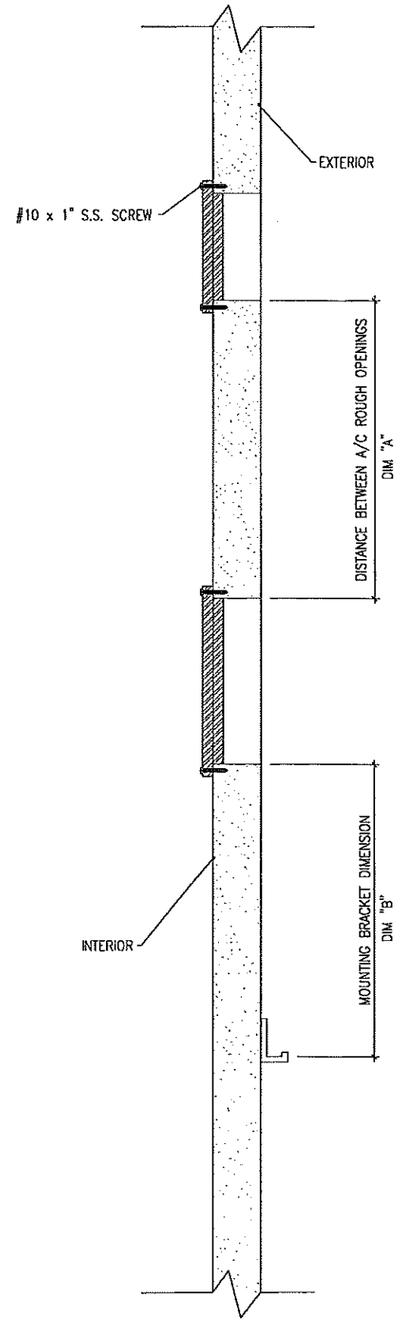

WALL SECTION

A/C ROUGH OPENING DIMENSIONS

A/C UNIT SIZES (TONS)	SUPPLY (INCHES)	RETURN (INCHES)	DIM "A"
1.5 THRU 2 TON UNITS	8-1/2" x 20-1/2"	12-1/2" x 20-1/2"	20"
2.5 THRU 3 TON UNITS	8-1/2" x 28-1/2"	14-1/2" x 28-1/2"	17-1/2"
3.5 THRU 6 TON UNITS	10-1/2" x 30-1/2"	16-1/2" x 30-1/2"	29-1/2"

A/C GRILL DIMENSIONS

A/C UNIT SIZES (TONS)	SUPPLY (INCHES)	RETURN (INCHES)
1.5 THRU 2 TON UNITS	8" x 20"	12" x 20"
2.5 THRU 3 TON UNITS	8" x 28"	14" x 28"
3.5 THRU 6 TON UNITS	10" x 30"	16" x 30"

MOUNTING BRACKET DIMENSIONS DIM "B"

A/C UNIT SIZES (TONS)	BARD	MARVAIR
1.5 THRU 2 TON UNITS	28-1/4"	28"
2.5 THRU 3 TON UNITS	29"	28-3/4"
3.5 THRU 5 TON UNITS	27-3/4"	26-3/4"
6 TON UNIT	37-1/4"	--

REVISIONS

CHG. BY	APPR. BY	DATE	REV
JVP	SRS	06/05/01	A
NEW BORDER.			
FPW	SRS	02/26/02	B
UPDATED STANDARDS.			

VFP, INC.

CORPORATE OFFICE
176 EastPark Drive
Roanoke, Virginia 24019
(540)977-0500 (540)977-5555 fax

CONCRETE SHELTERS (PLANT #2)
4954 Industrial Park
Duffield, Virginia 24244
(276)431-4000 (276)431-4220 fax

Except as may otherwise be provided by contract, these drawings and concepts are the sole property of VFP, Inc., they are issued in strict confidence, and shall not be reproduced in whole or part without the written permission of VFP, Inc.

DRAWN BY ROD B.	DATE 01/12/00
CHECKED BY S. SHUMATE	DATE 03/02/00
APPROVED BY S.SHUMATE	DATE RELEASED 03/02/00
DO NOT SCALE DRAWING	
SIZE B / CAGE NO 53223	REV B
SCALE 1/4"=1'0"	MODEL –

TITLE
STANDARD
A/C INSTALLATION
GENERAL USE

DRAWING NO. 277007

SHEET 2 OF 2

Valuation Consulting Report

Impacts of Proposed Cell Tower on Local Property Values

Prepared for: David A. Mekarski, AICP
Village of Wheeling Administrator
Prepared by: Accurity United
P. Barton DeLacy, MURP, MAI, CRE, FRICS
Rick S. Hiton MS, IFAS, LEED Green Associate
Date: June 13, 2016
File No.: DeLCon 16-010

Introduction

This Valuation Consulting report addressing potential property value impacts posed by a potential cell tower placement in the Village of Olympia Fields, has been prepared by Accurity United, a collaboration between Rick Hiton & Associates (Hiton) and DeLacy Consulting (DeLacy).

It is our understanding that Central States Towers has proposed to construct a wireless telecommunications facility behind the Cathedral of Joy Family Life Center Church east of Western Avenue and north of 87th Street in Olympia Fields. The property is zoned R-2 a single family residential district. Hence, the facility is a special use and must satisfy certain criteria to gain approval.

One of the requirements is that the special use will not be injurious to the use and enjoyment of other property in the immediate vicinity (for the purposes already permitted), nor substantially diminish and impair property values within the neighborhood.

This report is laid out with an Executive Summary and Findings, followed by a Description of the Project and Affected Area, an Overview of the Cell Tower Industry, a Literature Review, Bibliography and Addenda.

Executive Summary

Accurity United has blended the unique skill sets of Hiton, and DeLacy to provide a market transaction based analysis to the task at hand. Hiton has owned and operated one of the largest residential appraisal firms in the Chicago area for over 30 years. DeLacy brings both academic and professional credentials and national experience with impact studies.

Attachment: packet (2070 : CelluSite, LLC)

DeLacy has undertaken a number of such studies over the years, to test whether or to what extent a proposed "LULU" (locally undesirable land use) might affect property values. Not surprisingly, residential property can be most sensitive to such development.

Cell towers in urban locations are typically opposed for three reasons:

1. health concerns,
2. aesthetics and
3. adverse impacts on property values.

In the case of the subject project, it is our understanding that the applicants have substantially met Village siting criteria, but that opponents have voiced objections on all three counts. Unlike many land uses, The Federal Communications Act, Section 332 c (7), governs cell tower locations and states that local municipalities cannot regulate on the basis of environmental effects of radio frequency emissions. It is our understanding that perceived health risks cannot be the basis for denying a Cell Tower Permit.

Esthetic concerns indirectly relate to property values but are better addressed in terms of tower design options and the desired functionality of the facility. Otherwise, esthetic considerations, per se, are outside the scope of this analysis. Nevertheless, cell towers are tall structures that may be obtrusive and impact a pristine viewshed, regardless of whether a value impact can be measured.

In this case, the appraisers attempted to determine if any residential properties within a quarter mile radius, or even beyond, enjoyed the type of territorial view that the erection of a 100 ft cell tower might blight. So-called "viewsheds" generally require elevation, such as a hill side, or an open treeless vista, such as a golf course fairway or a lakeshore.

A second consideration is the living area configurations of the affected dwellings, themselves. To the extent possible, curbside, the appraisers were unable to find a single residence oriented so that a living room view could see where the tower is slated to be placed. The exception are the side yards of the three adjacent properties that back up to the site in the Wysteria neighborhood. In fact, one of the homes has its kitchen, dining room and outdoor patio directly facing the tower site. However, the existing western views from these residences is already impacted by non-residential structures including church buildings and a parking lot. Further, Western Avenue, where the subject church site fronts, is a heavily trafficked arterial.

We found that the terrain surrounding the proposed cell tower site is generally flat and tends to be densely wooded except where the woods have been cleared for ball fields or golf courses. Thus visual impacts from individual residences will be limited.

Attachment: packet (2070 : CelluSite, LLC)

Nevertheless, whether because of feared health effects if not blighted views, opponents have raised concern regarding the "stigma[1]" of being near a cell tower. Such stigmas may adversely affect property values by lengthening marketing times or simply depressing property values. As a matter of law, diminution in value can only be demonstrated with transactional evidence. Surveys attempting to measure personal preference may vary, and, frankly, don't count.

Diminution in Value is defined in the Uniform Standards of Professional Appraisal Practice as:

> The difference between the unimpaired and impaired values of the property being appraised. This difference can be due to the increased risk and/or costs attributable to the property's environ-mental condition[2].

The best tool to gauge external impacts on property values is a "paired sales" analysis. We have used a variation of that technique here.

A paired sale is typically an observation of the sale and re-sale of the same property, over time. So long as there have been no changes in the property during the interim, the difference between the sale prices can be extracted as an indicator of passive appreciation. Ultimately each pair must be analyzed for site specific changes or the circumstances of the parties involved. However, with a high frequency of transactions, aggregated trends become more reliable.

In this case we took a different tack. Cell towers have served the greater Chicago area for nearly two decades. Before and after observations lose their cogency when too much time intervenes. For instance, a change in value over time might be explained by a remodel or kitchen upgrade. In stagnant markets value declines may be due to property specific deterioration.

Sometimes, superseding events like the 2008-2010 recession overwhelm markets. Hence, say a cell tower was placed into service in 2009. Any drops in local property values would more likely be attributable to macro-economic conditions than the placement of a cell tower in the neighborhood.

We found that homes in the affected Olympia Fields subdivisions were surprisingly homogenous, particularly in the adjacent Wysteria development. By homogeneous we

[1] An adverse public perception regarding a property, commonly the identification of a property with a condition such as environmental contamination or other detrimental condition, such as a violent crime, that penalizes the marketability of the property and may also result in a diminution in value. See The Dictionary of Real Estate, 6th Edition, p.221

[2] USPAP, 2014-2015 ed., Advisory Opinion 9

Attachment: packet (2070 : CelluSite, LLC)

mean homes have similar utility, in terms of size, amenities and bedroom and bath count. Being developed by the same builder at the same time means interior finishes are likely to be of similar quality, if not appeal. It is not unusual for projects like Wysteria, developed as a self-conscious neighborhood, to have similar exterior finishes and appearance. Other considerations like landscaping and yards, how many cars can be parked, etc., will vary little house to house. Consequently, it can be expected sale prices, on a price per square foot basis, should fall within a narrow range. Further, one might expect that holding so many variables constant, when comparing one similar subdivision's sale activities with another, that a cell tower impact could be discerned.

The map below shows just some of the hundreds of cell towers that have proliferated across the Chicago area landscape. This is in response to what has become almost universal cell phone ownership and the increasing demands for data streaming and other types of cellular use.

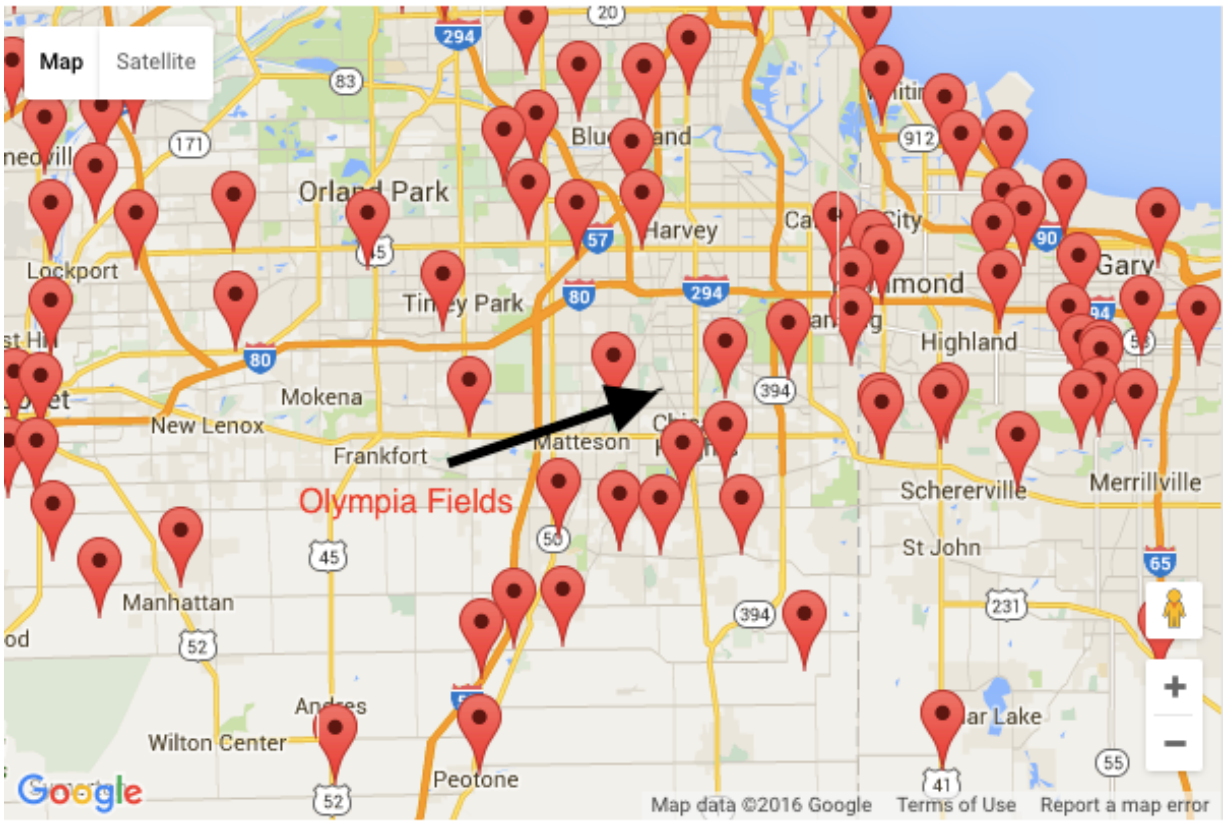

The map above shows the relative density of cell towers throughout South Cook County

While perhaps not comprehensive, a number of cell companies report cell tower locations on interactive maps, such as above. The interactive map allowed us to click on a given site and link it to Google Maps aerials.

Attachment: packet (2070 : CelluSite, LLC)

We focused on cell sites in and near affluent neighborhoods, not just in the South Cook County, but across the Metropolitan area.[3]. Using proprietary Multiple Listing Service (MLS) records we were able to comb through data to find subdivision developments similar in age and price point to Wysteria.

The key was homogeneity. Older neighborhoods such as Graymoor or The Greens are more difficult to pair-up and evaluate because custom homes predominate and sale price differences may be explained by other causal factors. Wysteria includes 45 single-family, and 105 attached dwelling units built at the same time by the same builder and governed by the same Homeowners Association (HOA). While it is too early to tell whether home values might be affected, either way, in this study we sought to find other similarly homogeneous developments where we could test cell tower impacts.

Cell tower locations were confirmed using Google Maps Pro. In most cases the cell tower had been installed for a number of years. If the cell tower was within a quarter mile of a subdivision, we then drilled down into MLS to see if we could find sales or listing activity within the last three years. Then, based on the characteristics of that affected subdivision, we searched for similar subdivisions with contemporaneous sale activities.

To be clear, the point was not to necessarily find subdivisions like Wisteria, but to find similar subdivisions removed from cell tower influence to compare to the ones that were apparently impacted. Because, one subdivision to another, homes were so homogeneous, we considered sale price per square foot a strong indicator to capture significant changes in value.

Findings

1. From an esthetics standpoint, we found no impacted viewsheds. The affected properties include mostly single family residences and a few institutional properties; chiefly churches, which lie within a quarter mile of the selected site. Most of the homes are in wooded areas or are oriented so as not to have any reasonable view of the tower. As noted above, the tower might be visible from certain vantage points on the street, perhaps from a roof top, or from side and rear yards. Hence diminution in value must be inferred as to whether a negative stigma can be attributed from cell tower placement.

[3] See:
http://www.cellreception.com/towers/towers.php?filter_verizon=1&filter_tmobile=1&filter_att=1&filter_sprint=1&city=olympia+fields&state_abr=il

Attachment: packet (2070 : CelluSite, LLC)

2. Cell phone towers are albeit intrusive but necessary public utilities, no less vital to serving community needs than water towers, radio and television antennas or overhead high-voltage wires.
3. Accurity has found no transactional evidence to support concerns that proximity to a cell tower, as described below, would diminish or adversely affect either residential or institutional property values in the immediate vicinity. We could find no evidence of demonstrable stigma. In the tables below, we array our findings from four neighborhoods where we paired average sales prices within subdivisions to test for cell tower impact.
4. An expanded paired sales analysis, which we have relied on, can never be more than anecdotal evidence that informs the judgement of the valuers. A robust statistical model would require thousands of observations in order to sample a truly random population. In our experience, such hedonic analyses, themselves, can be flawed because of the compounded assumptions blending complex personal preferences and the very unique characteristics of most owner-occupied residences.

We tested four suburban Chicago neighborhoods where we found both a cell tower and a proximate reasonably homogeneous subdivision. We then searched for recent home sales in those developments, all within a quarter mile of the tower. Since view impact is negligible given the flat topography and frequency of shade trees, any diminution in value could be attributed to a negative stigma.

In three of the four areas, including Flossmoor and Steger, average sale prices higher within a quarter mile of the cell tower than beyond it.

The following tables summarize our cell tower impact test areas. Each table has two sets of data: home sales within a ¼ mile radius of an established cell tower site and sales of otherwise similar homes outside the affected area in the same general neighborhood. In the summaries we then array some benchmark statistics including the average house size and the average sale price for each subset of observations. The far column calculated the difference as a percentage. A positive percentage means the homes near the cell tower exceeded the values for the homes away.

Finally, below the purple bar we calculate the average sale price per sq. ft. for each data set and calculate that difference. For Steger, the homes near the cell tower sold for 4.47% more than the homes removed from the cell tower influence. In Flossmoor, the two averages vary by less than 1.00%, as is the case with the Wheaton test. In Northbrook, homes that had sold within a quarter mile of a cell tower sold for 11.21% in this case.

Attachment: packet (2070 : CelluSite, LLC)

Neighborhood

Village of Steger Cook-Will County	Home sales near cell tower	Sales outside tower influence	Difference
Number of Sales	5	7	
Date Range	2014-2016	2014-2016	
Average House Size (SF)	1,524	1,300	14.69%
Average Sale Price	$120,520	$92,900	22.92%
Comparison on per sq ft. basis			
Average	**$75.40**	**$72.02**	4.47%

Village of Flossmoor Cook County			
Number of Sales	3	13	
Date Range	2014-2016	2014-2015	
Average House Size (SF)	3,886	3,594	7.53%
Average Sale Price	$302,500	$276,967	8.44%
Comparison on per sq ft. basis			
Average	**$77.90**	**$77.35**	0.70%

Village of Northbrook Cook County	Home sales near cell tower	Sales outside tower influence	Difference
Number of Sales	3	18	
Date Range	2014	2015-2016	
Average House Size (SF)	2,646	2,505	5.32%
Average Sale Price	$495,833	$548,356	-10.59%
Comparison on per sq ft. basis			
Average	**$201.23**	**$223.78**	-11.21%

Village of Wheaton Cook County			
Number of Sales	5	18	
Date Range	2014-2015	2015-2016	
Average House Size (SF)	1,757	1,737	1.15%
Average Sale Price	$303,207	$291,306	3.93%
Comparison on per sq ft. basis			
Average	**$174.47**	**$173.90**	0.33%

Attachment: packet (2070 : CelluSite, LLC)

These analyses are not necessarily conclusive, but they support the hypothesis that cell towers may have, at most a negligible impact on nearby property values. Complete descriptions of these data sets are presented in the addenda.

Project Description and Area Analysis

The proposed cell tower site would be located on an R-2 single family zoned 3.0-acre site on the eastern edge of Olympia Fields. The site is virtually on the Village boundary with adjacent Chicago Heights.

Central State Towers (CST) proposes to construct a wireless telecommunications facility (aka a cell tower) behind the Cathedral of Joy Family Life Center Church east of Western Avenue and north of 87th Street. CST will lease a defined site area for an undisclosed term and rate from the Church. We have found that cell tower companies prefer institutional church sites when commercial sites or municipal structures (like waters are unavailable.

The following uses surround the proposed development site:

North	United Methodist Church
East	Single-family detached housing (Wysteria Subdivision)
South	Church of the Nazarene in Chicago Heights: while one single-family detached house and a vacant lot are both in unincorporated Cook County
West	Single-family detached housing in the Olympia Fields East Subdivision across Western Avenue.

According to the applicants, the proposed monopole, shelter, platform, and fence all conform to the setback standards established in the R-2 One-Family Residence District. The district regulations require a minimum rear yard of 30' and a minimum side yard of 10'. The proposed development provides a rear setback of 99' (from the chain link fence to the rear property line) and a side yard setback of 30'. Additionally, the zoning ordinance requires all fences on residential properties to be a maximum height of 6'. The proposed chain link fence around the lease area meets this regulation.

The overall parcel where the tower is proposed is nearly three acres in size, so the first criteria is meet. The tower is approximately 136' from the rear property line, and the nearest house is approximately 34' from that property line, so the tower is approximately 170' from the nearest residential structure, thus meeting the second criteria.

Cell Tower Industry Analysis

Attachment: packet (2070 : CelluSite, LLC)

Where locally undesirable land uses ("LULUs") seem to have the most undesirable impact on property values is in anticipation of their construction. Once in place, such utilitarian facilities tend to blend into the landscape. Today cell towers, no matter how unsightly have become ubiquitous. In the state of Illinois, alone, there are currently 2,867 cell towers and antennas registered with the FCC. Their presence is directly related to personal cell phone demand, and increasingly for public safety.

The lack of these utilities not only affect residences, it also negatively affects first responders' abilities to access cell networks in emergencies or disasters. Most first responders rely on wireless telecommunications in their vehicles to communicate and coordinate services. In addition, it should be noted that Wireless Telecommunication Facilities as defined by the FCC exist throughout residential areas of Olympia Fields. They are already present on every water tower within the Village.

Some industry background for context might be helpful. Cell tower locations are the result of a cell phone carrier working with their internal engineering staff to satisfy specific needs that company has in certain locations throughout the country. The engineering aspect is classified as "Radio Frequency Engineering" or RF Engineering. RF engineers act in concert with site development and construction staff to optimize any cell tower site development.

Cellular (mobile) telephones are sophisticated two-way radios that use ultrahigh frequency (UHF) radio waves to communicate information. The information is passed between a mobile phone and a network of low-powered transceivers, referred to as mobile phone sites or cell sites. As mobile sites are very low powered they serve only a limited geographic area (or "cell").

A cell site is typically made up of a mast with antennas connected to equipment stored in a cabinet. Power is fed into the cabinet by underground cable.

The largest US Wireless Service Providers today include, the following- with approximate numbers of users:

- Verizon Wireless: 141.4 million
- AT&T Mobile: 130.4 million
- T-Mobile US: 65.5 million
- Sprint Corporation: 58.8 million
- US Cellular: 4.9 million

Attachment: packet (2070 : CelluSite, LLC)

These top five providers all use 4G LTE as their communication standard. The LTE bands across companies remain incompatible.

Cell tower proliferation has been a simple response to consumer demand and the emergence of e-commerce in a digital age. They have become as necessary to daily life as telephone poles or fire hydrants. Their mere ubiquity suggests that fears of adverse impacts on property values may be misplaced.

Methodology

Our method for evaluating the potential effect of the Project on property values included three components. First, we gathered information about the Project and the surrounding area.

One frequently used tool to gauge external impacts on property values is a “paired sales” analysis. A paired sale is an observation of the sale and re-sale of the same property, over time. So long as there have been no changes in the property during the interim, the difference between the sale prices can be extracted as an indicator of passive appreciation. Ultimately each pair must be analyzed for site specific changes or the circumstances of the parties involved. However, with a high frequency of transactions, aggregated trends become more reliable.

In most zoning cases, local appraisers are hired to demonstrate property value impacts of a proposed cell tower project. Appraisers will typically rely on a paired sales analysis, a technique commonly used to gauge price appreciation over time or measure how much to adjust for varying characteristics, like extra bathrooms or house size. In theory, one compares qualified arm's length sales of two identical properties, save for a single differentiating feature. The implication being that the difference accounts for the variance in price. The simplest example is the sale and resale of the same house. Absent changes to configuration or remodeling and assuming similar physical condition, any change in price over time might be attribute to appreciation (if the price went up) or depreciation (if the price dropped).

This approach is only as valid as the data allows. Paired sales have most relevance when the data set is homogeneous and there are lots of transactions, or "observations" in statistical parlance. Thus a large residential subdivision where homes are constructed by the same builder, where age and quality is uniform, and only limited variables account for price differences would provide an ideal data set to search for paired sales. Paired sales

Attachment: packet (2070 : CelluSite, LLC)

might be analyzed to test whether adding a third garage increased property value. And if so, by how much, and did the value increase exceed the cost to add?

Paired sales would be an ideal and logical tool, if only houses were pencils. But every property is fixed in place and unique. Houses, even when seemingly identical, eventually come to reflect the style and habits of the occupant. No home is ever really an interchangeable commodity. Hence, the paired sale methodology, at best is an anecdotal tool that the appraiser relies on, not as absolute proof, but only as evidence supporting her findings, otherwise based on her judgment and years of experience.

And, as any appraiser will admit, sometimes the data does not cooperate. Two sets of paired sales, might show just the opposite. Data can be scrubbed, outliers explained, but in some cases, there is simply no accounting for personal preference. However, statistical theory recognizes this and deals with it two ways: increase the number of observations, or even better, randomly sample a vast population.

Literature Review

Adverse property value impacts from LULUs (like cell towers) have long been subject to debate. The literature is rich with academic, industry and government sponsored studies addressing the perception, measure and duration of such impacts.

Real estate impact studies fall into two categories; micro-economic studies based on paired sales and hedonic studies based on statistical sampling and multiple regression. The former can be prepared by real estate appraisers using local multiple listings and assessor records. The latter analyses are much broader in scope and often require foundation or government funding to support.

Some peer-reviewed studies addressing "disamenities" (an academic term for LULUs) on home values have found modest impacts when high end or custom homes are involved (Kroll and Priestley, 1992). Other studies have suggested negative impacts dissipate over time and can be most significant in anticipation of construction, compared with post-construction transactions.

One significant impact study on wind farms was undertaken by the Lawrence Berkeley National Laboratory Team of Ben Hoen and Ryan Wiser, PhD who have analyzed the impacts of wind turbines on property values at 6 sites in the Northeast United States using a hedonic pricing model.[4]

[4] Hoen, Ben, “Impacts of Windmill Visibility on Property Values in Madison County, New York,” Bard Center for Environmental Policy, Bard College, Annandale on the Hudson, New York, 2006; updated at AWEA Wind Energy Fall Symposium, November 2, 2007 at Carlsbad, CA

Attachment: packet (2070 : CelluSite, LLC)

Hoen and Wiser have concluded that "There is no statistical evidence that homes with a view of wind turbines have different values than homes without such views." These analyses did not uncover any statistically significant relationship between either proximity to or visibility of the wind farm and the sale price of homes.

A residential hedonic pricing model regresses a series of descriptive statistics regarding a population of observations. The hedonic pricing model can rigorously predict changes in residential transaction values based on home characteristics. When data is available, this is clearly the preferred tool. For housing models, typical characteristics include house size, lot size, bathroom number, age, fireplaces, and distance from some node of value such as a downtown. The models are used to predict outcomes, testing variables for significance. Thus a researcher may take into account other variations in property characteristics in determining the impact of projects like a wind farm on property value.

The key to any reliable statistical model is a sufficiently large data pool, or population, to allow random sampling. In general, these studies have proven most effective in urban or suburban residential areas where a high number of transactions involving fairly homogeneous properties can be observed. Given a significant sample size, fairly conclusive outcomes can be predicted using this method.

Even in urban areas, statistical studies attempting to predict value impacts on residential properties lack consistency in model design and applications of uniform adjustments to the data.[5]

Whether an environmental impact can be gauged to be statistically significant is not the same as denying it exists. The problem is measurement. The best academic studies referenced here repeatedly find no measurable impact from LULUs like cell towers on proximate home values. Yet, their data base is limited and perhaps inconclusive. Each transaction is inherently unique. Advocates on both sides will find evidence to support their interests and argument.

[5] Kroll, Cynthia A., and Priestley, Thomas. "The Effects of Overhead Transmission Lines on Property Values. A Review and Analysis of the Literature." Prepared for Edison Electric Institute Siting and Environmental Task Force. July 1992, p. iii-iv

Attachment: packet (2070 : CelluSite, LLC)

CERTIFICATION OF REAL PROPERTY VALUATION CONSULTING REPORT

We certify to the best of our knowledge and belief:

1. The statements of fact contained in this report are true and correct.
2. The reported analyses, opinions, and conclusions are limited only by the reported assumptions and limiting conditions and are our personal, impartial and unbiased professional analyses, opinions, and conclusions.
3. We have no present or prospective interest in or bias with respect to the property that is the subject of this report and have no personal interest in or bias with respect to the parties involved with this assignment.
4. We have performed no services in any capacity regarding the property subject of this report for the three years prior to acceptance of this assignment.
5. Our engagement in this assignment was not contingent upon developing or reporting predetermined results.
6. Our compensation for completing this assignment is not contingent upon the development or reporting of a predetermined value or direction in value that favors the cause of the client, the amount of the value opinion, the attainment of a stipulated result, or the occurrence of a subsequent event directly related to the intended use of this appraisal.
7. This real property appraisal consulting assignment was not based upon a requested minimum valuation, a specific valuation, or the approval of a loan.
8. Our analyses, opinions, and conclusions were developed, and this report has been prepared, in conformity with the Uniform Standards of Professional Appraisal Practice.
9. Lisa Hiton, MA, assisted in the preparation and analysis of this report.
10. The reported analyses, opinions, and conclusions were developed, and this report has been prepared, in conformity with the requirements of the Code of Professional Ethics and Standards of Professional Appraisal Practice of the Appraisal Institute.
11. The use of this report is subject to the requirements of the Appraisal Institute relating to review by its duly authorized representatives.
12. As of the date of this report, P. Barton DeLacy, MAI, CRE, FRICS has completed the continuing education program of the Appraisal Institute.
13. Properties that are the subject of this report were inspected as part of this engagement.

P. Barton DeLacy, MAI, CRE, ASA, FRICS
Illinois Certified General Appraiser
553.001797
Expires 9/30/2017

Rick Hiton, IFAS, LEED Green Associate, MS
Illinois Certified Residential Appraiser
556.000255
Expires 9/30/2017

Attachment: packet (2070 : CelluSite, LLC)

References- Bibliography

Bell, Randall, Real Estate Damages, Applied Economics and Detrimental Conditions, 2nd Edition, The Appraisal Institute, Chicago, IL, 2008

Blomquist, Glenn, "The Effect of Electric Utility Power Plant Location on Area Property Value," Land Economics, Vol.50, pp 97-101 (1974)

Bond, Sandy. "The Effect of Distance to Cell Phone Towers on House Prices in Florida," *The Appraisal Journal,* (Fall 2007):362-9

Bottemiller, Steven C. and Wolverton, Marvin L., "Further Analysis of Transmission Line Impact on Residential Property Values," *The Appraisal Journal, The* Appraisal Institute, (July 2003), pp. 244-252

Dale, Larry, Murdoch, James C., Thayer, Mark A. and Waddell, Paul A, "Do Property Values Rebound from Environmental Stigmas?" *Land Economics*, May 1999, Vol. 75, No. 2 pages 311-326

DeLacy, P. B., "Renewable Energy: Headwinds Ahead?" Real Estate Issues, The Counselors of Real Estate, Vol. 36, No. 3, 2011

DeLacy, P. Barton, Earth, Wind and LULUs — Wind Farms, Harvesting Energy, and Controversy, Journal for the Center for Real Estate Studies, National Association of Realtors, Vol. 1, No. 2, September 2013, pp 40-47

DeLacy, P. Barton, "A LULU of a case: Gauging Property Value Impacts in Rural Areas," *Real Estate Issues*, Fall 2004, Volume 29, No. 3.

Despite toxic history, residents return to Love Canal, CNN.com., August 7, 1998 http://www.cnn.com/US/9808/07/love.canal/

Ellis, Sherman R., "Effects of effluent from a coal-fired, electric-generating powerplant on local ground water near Hayden, Colorado", prepared for the U.S. Environmental Protection Agency, Doc# I 19.76:81-1196, 1982

Gamble, H. B., Downing, R. H., "Effects of the Accident at Three Mile Island on Residential Property Values and Sales", Pennsylvania State University for Division of Safeguards, Fuel Cycle and Environmental Research, Office of Nuclear Regulatory Research, U. S. Nuclear regulatory Commission, April 1981

Harris, John D., U. S. Environmental Protection Agency, "Property Values, Stigma and Superfund", Superfund Redevelopment Program, 1999; online at http://www.epa.gov/superfund/programs/recycle/property.htm

Hoen, Ben, "Impacts of Windmill Visibility on Property Values in Madison County, New York," Bard Center for Environmental Policy, Bard College, Annandale on the Hudson, New York, 2006

Jackson, Thomas O. and Jennifer Pitts, "Powerlines and Property Values Revisited," *The Appraisal Journal*, The Appraisal Institute, Fall 2007, pp 323-30

Jackson, Thomas O., "Case Studies Analysis: Environmental stigma and Monitored Natural Attenuation", *The Appraisal Journal*, 2004, Vol. 72, Number 2, 111-118

Attachment: packet (2070 : CelluSite, LLC)

Jordal-Jorgensen, Jorgen. "Social Assessment of Wind Power: Visual Effect and Noise from Windmills-Quantifying and Valuation" AKF- Institute of Local Government Studies, Denmark, April 1996. http://www.akf.dk/eng/wind0.htm

Kroll, Cynthia A., and Priestley, Thomas. "The Effects of Overhead Transmission Lines on Property Values. A Review and Analysis of the Literature." Prepared for Edison Electric Institute Siting and Environmental Task Force. July 1992

Love Canal History; http://www.globalserve.net/~spinc/atomcc/history.htm

McCluskey, Jill J. and Gordon C. Rausser, 2001. "Estimation of Perceived Risk and Its Effect on Property Values," *Land Economics*, Vol. 77(2001):42-55

McCluskey, Jill J. and Gordon C. Rausser, 2003. "Hazardous Waste Sites and Housing Appreciation Rates," Journal of Environmental Economics and Management 45(1): 166-176.

McCluskey, Jill J. and Gordon C. Rausser, 2003. "Stigmatized Asset Value: Is it Temporary or Long-term?" The Review of Economics and Statistics 85(2): 276-285.

McCluskey, Jill J., Ray G. Huffaker, and Gordon C. Rausser, 2002. "Neighborhood Effects and Compensation for Property Value Diminution," Law & Policy 24(1): 37-50.

Mundy, Bill, "The Impact of Hazardous Material on Property Value", *The Appraisal Journal, The* Appraisal Institute, Vol. 60, April 1992, 155-162

Royal Institution of Chartered Surveyors, "Impact of Wind Farms on the Value of Residential Property and Agricultural Land", An RICS Survey; November 2004

Schulz, Steven and Nick Schmitz, „Viewshed Analysis to Measure the Impact of Lake Views on Residential Properties, *The Appraisal Journal*, The Appraisal Institute, Summer 2008, pp 224-32

Sterzinger, George, et al., "The Effect of Wind Development on Local Property Values", Renewable Energy Policy Project, Washington, D. C., 2003

Strathman, James G., DeLacy, P. Barton, Dueker, Kenneth J., "Creative Financing "Concessions in Residential Sales: Effects and Implications," *Housing Finance Review*, Federal Home Loan Mortgage Corp., April 1984, pp 149-163

Urban Environmental Research, LLC, "Clark County Property Value Report on the Effects of DOE's Proposal to Ship High Level Nuclear waste to a Repository at Yucca Mountain, Scottsdale, AZ, December 2001

Wilson, Albert R., "Proximity Stigma: Testing the Hypothesis", *The Appraisal Journal, The* Appraisal Institute, Vol. 72, no. 3, Summer 2004, 253-261

Wilson, Shawn, "Evaluating the Potential Impact of a Proposed Landfill," *The Appraisal Journal*, The Appraisal Institute, Winter 2009, pp 24-36

Wiser, Ryan, et al., The Cost of Transmission for Wind Energy: A Review of Transmission Studies, Ernest Orlando Lawrence Berkeley National Laboratory, February 2009, http://eetd.lbl.gov/EA/EMP

Parties Interviewed

Attachment: packet (2070 : CelluSite, LLC)

Jill McCluskey, PhD, Associate Professor, School of Economic Sciences, Washington State University, Pullman, WA (509) 335-2835; mccluskey@wsu.edu

James Strathman, PhD, Director, Center for Urban Studies, College of Urban and Public Affairs, Portland State University, PO Box 751, Portland, OR (503) 725-4069; strathmanj@pdx.edu

Thomas Priestley, PhD, CH2M Hill, (510) 587-7653; Analysis of the Visual Resources Impacts of the Revised KV Wind Power Project, internal technical memorandum prepared for Horizon Energy, November 7, 2005.

Arne Nielsen, Wind Engineers, Inc., Shadow Flicker Briefing re: KV Wind Power Project, November 23, 2005.

Ben Hoen, MS candidate, Bard College; benhoen2@earthlink.net ; 718-260-8004

Ryan H. Wiser, PhD, Ernest Orlando Lawrence Berkeley National Laboratory, One Cyclotron Rd., Berkeley, CA; rhwiser@lbl.gov; 510-486-5474

Websites Researched

The British Wind Energy Association: www.bwea.com; BWEA Briefing Sheet- “Public Attitudes to Wind Energy in the UK,” October 2005

Attachment: packet (2070 : CelluSite, LLC)

Hilco Real Estate Appraisal, LLC
4906 Main Street, Suite 101 • Lisle, IL 60532 • 630.729.1000 • fax: 630.729.7930 • www.HilcoValuationServices.com

September 22, 2015

Mr. Ron Bittner
PI Telecom Infrastructure T, LLC
4601 Touchton Road East
Bldg. 300, Ste. 3200
Jacksonville, FL 32246

Re: Proposed Communications Equipment Site #CH76304
Mt. Emblem Cemetery; 520 E. Grand Avenue, Elmhurst, IL (File #15LI118)

Dear Mr. Bittner:

Pursuant to your request, I have completed an inspection and review of the above captioned location, relative to the potential impact, if any, on the Market Value of surrounding properties by the installation of communications equipment on the site. This consultation letter is therefore a summarization of the scope of work and background leading to my opinions on this matter, but does not constitute an appraisal report under the Uniform Standards of Professional Appraisal Practice (USPAP). Additionally, while this letter contains references to the supporting data and documentation leading to my opinions, said data and documentation is maintained in our files and, while available, is not presented in detail herein.

The proposed equipment is to consist of a 100-foot monopine communications facility, to be situated near the southwest corner of the Mt. Emblem Cemetery property, roughly 80 to 85 feet east of the Wrightwood Avenue dead-end. A monopine is a monopole communications tower that is camouflaged to have the appearance of a pine tree. The monopine will be situated on a leased site ("the site") measuring 70.0 x 70.0 feet. The location of the leased site is heavily wooded with numerous taller trees, making visibility of the cemetery very limited from Wrightwood. The larger parcel on which the site will be located is the above noted cemetery, which is about 45 acres in size with its main entrance at the southwest corner of Grand Avenue and County Line Road. The site is zoned CR, Conservation/Recreation by the City of Elmhurst.

Aside from the cemetery, the immediate surrounding area is primarily residential in nature to the south and west, with several distribution/warehouse uses a short distance to the east along County Line Road. However, the site immediately to the west of the subject pad site is a roughly 60’ x 150’ parcel owned by Illinois American Water Company that is fenced and appears to be some type of support facility for water distribution. Also, this entire area is divided by a Commonwealth Edison high-tension power line right-of-way that extends in an east-west direction immediately on the south side of Wrightwood Avenue and the cemetery. This area is therefore host to numerous lattice towers supporting the power lines. Wrightwood Avenue is otherwise a residential street, with single family homes along its entire north side at this location.

Attachment: packet (2070 : CelluSite, LLC)

In the general area surrounding the subject property there are a number of visible existing communication towers. General Data Resources, Inc. reports on their web site that there are 734 existing communication towers within a 4 mile radius of the subject location. This is an unusually high figure, however it is created by the fact that the south ~50 percent of O'Hare airport falls within this radius. Eliminating all towers with a City of Chicago (O'Hare) location results in 98 remaining towers, most of which exceed 100 feet in height. Thus, while the need for the proposed tower is outside the area of expertise of the undersigned, towers of this nature are a relatively typical part of the overall landscape in the area. In addition, and as with most developed areas, there are multiple nearby protrusions into the sky, including existing light poles, telephone poles, power lines, and the aforementioned high-tension power towers.

Research of the Midwest Real Estate Data (MRED) multiple listing service indicates an active market for homes in the immediate area over the past 12 months. Using a geographic area bounded on the north by Grand Avenue, on the west by York Road, on the south by Crestview Avenue, and on the east by County Line Road, there have been 42 closed transactions of detached single family homes over this time period, with prices ranging from $111,000 to $662,000, averaging just under $310,000 and having a median of $264,500. There are currently 23 properties available for sale within that same geography, at an average asking price slightly over $370,000. The immediate area was developed primarily in the 1950's and 60's, although some newer homes are present, along with a small number of older homes. Activity involving attached housing (condominiums or townhouses) in this same area is more limited, with 19 closed sales over the same 12 month period and 7 current listings. The sold properties averaged sale prices just over $105,000, while the current listings have average asking prices just over $100,000. Observation from the street reveals overall maintenance levels for all types of housing appearing to be average to good.

As noted above, the proposed equipment is to consist of a 100-foot monopine communications facility, to be situated near the southwest corner of the Mt. Emblem Cemetery property, roughly 80 to 85 feet east of the Wrightwood Avenue dead-end. The monopine will be situated on a leased site ("the site") measuring 70.0 x 70.0 feet. The equipment typically associated with this type of facility will be located on a 9' x 14' concrete equipment pad immediately to the east of the monopine, and within the site. The site will be surrounded with a 6-foot high chain link fence, plus 1 foot of barbed wire at the top, encompassing both the monopine and the equipment pad.

As you are aware, I have extensive experience in evaluating the effect on surrounding properties of communications equipment sites of this type, summarized as follows:

For your general information, I am presently the Managing Director of the Lisle, IL office of Hilco Real Estate Appraisal, LLC. I have been directly involved in the valuation and analysis of

Attachment: packet (2070 : CelluSite, LLC)

real estate of all types since 1981. I hold the MAI designation from the Appraisal Institute, am licensed as a Certified General Appraiser, and additionally am a licensed real estate broker, holding the commercial brokerage designation of CCIM. A more detailed summary of my credentials and professional background, as well as my experience in the real estate valuation/consultation field, is attached.

Specifically with regard to the type of situation you have called upon me to address, I have been involved in dozens of consultation assignments specific to this issue since the mid 1990's. All of these assignments have been in the Chicago metropolitan area, including but not limited to the communities of Aurora, Barrington, Barrington Hills, Bartlett, Buffalo Grove, Chicago, Glencoe, Homewood, Lincolnshire, Kenilworth, Maple Park, Midlothian, North Barrington, Oak Forest, Streamwood, Vernon Hills, Westmont, Willow Springs and Winnetka. These locations have involved a variety of neighborhood types, including residential, commercial, industrial, and farmland. The work we have performed in each case has varied, ranging from providing written studies on specific sites, to giving presentations at planning and/or zoning committee hearings and/or testifying in court for litigation matters relating to this property type.

In the process of completing these assignments, the request specifically made in each case has been to determine what effect, if any, a communications equipment site may have on the value of surrounding and/or nearby properties. Of significant importance to these consultation assignments is the following: I am not paid, nor do I accept assignments in which a specific position on this issue is advocated. The sole impetus is to be entirely objective, providing sound reasoning for the conclusions, and based upon the actions and reactions of the buying and selling real estate market.

In each of these situations the basic plan of analysis has been twofold. First, property sales are researched, including all details of the transactions and the physical characteristics of the properties involved, in order to ascertain if any difference in actual sale prices could be detected due to location near or in view of a communications equipment site. The basic premise of this analysis type is founded in the principles of real estate valuation commonly accepted and utilized by all courts of law, governmental bodies, and major banks. This premise is that of the direct comparison of physical and locational characteristics of properties that have sold, resulting in a determination of the market reaction, if any, to various factors relative to those properties, and expressed in dollars.

The second aspect of the analysis plan has been to interview and consult with other real estate professionals, specifically those directly involved in the marketing and sale of properties, to discover their opinions of this same issue, relative to their daily professional lives in dealing directly with buyers and sellers of real estate.

Attachment: packet (2070 : CelluSite, LLC)

The primary challenge with any analysis of this type is that of isolating the factor in question. The goal is to determine the objective reality of what the market actually does. It therefore becomes incumbent on the appraiser to actually seek out a negative impact, as opposed to attempting to locate evidence that none exists.

The process of completing this type of analysis is highly detailed, and includes numerous difficulties that result in "dead ends" along the way. Some of the factors that come in to play in this process are as follows:

- The simple identification of a communications equipment site does not mean sufficient data exists in that location to isolate the factor in question.
- Even when potential sufficient data exists, if other influences affect the properties (i.e. busy streets, proximity to commercial/industrial property, etc.); it often voids these properties from consideration.
- Transactions are influenced by a number of factors that go beyond the physical location, size and condition of a given property. In particular with residential property, many people buy and sell based on intangible emotional factors.
- Opinion polls about the factor in question do not necessarily provide the answer and can easily result in biased answers depending on what question is actually asked. While general opinions can be a consideration, actual market evidence often shows the opinion has no real foundation.
- Many people react negatively to the proposed installation of a communications equipment site, opining that it will negatively impact their property value. However when asked about the impact of an existing site, they are often unaware it even exists, or express ambivalence about it.
- Pew Research Center (pewresearch.org) reported as of January 2014 that 91% of American adults have a cell phone, 58% of which are smartphones. Additionally, 32% of American adults own an e-reader and 42% of American adults own a tablet computer. Pew also reports that as of June 2012, 35.8% of American homes have become cell only and another 15.9% of people receive all or almost all their calls wirelessly, even though they still have landlines. This number of cell only homes is an increase of over 40% from a May 2010 article published on CNET News that reported nearly 25% of U.S. households had eliminated landlines at that time.

Attachment: packet (2070 : CelluSite, LLC)

- From a real estate valuation standpoint, the availability of adequate utility services is of primary importance to a property's value and standing in the market. As indicated above, the importance of adequate wireless communications services is an increasingly important factor for home buyers. It would therefore follow that lack of a utility service such as wireless communications could have a significant negative impact on value, similar to a negative impact created by lack of electricity or natural gas.

- The vast majority of people to do not drive, bicycle or walk down a street looking up. There is a high frequency of people who pass by communications equipment sites on a daily basis without consciously noticing them.

As the aforementioned assignments have been completed, essentially three categories of potential impact and concern have been determined to exist. These categories are as follows:

1) *Environmental* - The potential for pollution of the air, surface, and/or sub-surface.
2) *Health* - The potential impact on nearby inhabitants and/or property users.
3) *View* - The potential impact on nearby inhabitants and/or property users.

In the process of completing these consultation assignments, the above two step analysis plan has been completed on 40 to 50 locations involving wireless communications facilities; several of which have been analyzed during separate time periods. As mentioned above, these locations involved a variety of property types (residential, commercial, etc.), however approximately 35 to 40 of these were residential in character. Although every situation has the potential for unique variables, the experiences with the locations analyzed have repeatedly resulted in the following 5 points of finding:

1) There is no evidence to suggest that any environmental or health issues arise as a result of communications equipment sites.
2) There is no *supported* perception, within the general buying and selling real estate populace, suggesting any environmental or health issues arise as a result of communications equipment sites.
3) No ascertainable difference in property values has been found as a result of this specific locational characteristic.
4) Other real estate professionals have repeatedly reiterated there is a lack of market evidence supporting an ascertainable difference in property values as a result of this specific locational characteristic.
5) Changes in market values, specifically appreciation, are not restrained as a result of this specific locational characteristic.

Attachment: packet (2070 : CelluSite, LLC)

It is important to note that any situation of this type must be evaluated on its own merits, and within the context of the specific site and its environs. The location in question is a wooded corner of a large cemetery property, east of a dead-end street and adjacent to high-tension power lines and their supporting lattice towers. As with most developed areas, there are multiple protrusions into the sky, including existing light poles, telephone poles, power lines, and the aforementioned high-tension power towers. There are 98 existing communication towers within a 4 mile radius of the subject location, excluding those associated with O'Hare Airport, most of which exceed 100 feet in height.

The proposed facility will be a monopine designed tower with an adjacent concrete equipment pad, within a fenced area. The site is in a wooded corner of a cemetery property adjacent to a high-tension power line right-of-way. There are virtually no passing vehicles or pedestrians at this location. This results in communications equipment that will virtually unnoticeable in relationship to the existing landscape, and results in a site location that is superior to many others for this type of use.

It is therefore my opinion, based on review of the proposed plans, inspection of the site, as well as my experience with this factor in other locations, that the proposed communications facility will not have any negative impact on the use, enjoyment, or value of surrounding properties. Additionally, it is my opinion no substantial or undue adverse effect upon adjacent property, the character of the area, or other matters affecting the public health, safety, and general welfare will occur.

If I can be of further service please contact me.

Sincerely,

HILCO REAL ESTATE APPRAISAL, LLC

David A. Kunkel, MAI, CCIM
Managing Director

Attachment

15LI118

Attachment: packet (2070 : CelluSite, LLC)

QUALIFICATION SUMMARY - DAVID A. KUNKEL, MAI, CCIM

March 2013 - Present	--	Hilco Real Estate Appraisal, LLC; Managing Director
July 1987 - March 2013	--	Kunkel & Associates, Inc.; President / Owner
January 1981 – July 1987	--	Various staff and field appraiser positions

Scope of Experience:
Mr. Kunkel is the Managing Director of the Lisle, IL office of Hilco Real Estate Appraisal, LLC. Responsibilities include business development, appraisal, management, review and production.

Mr. Kunkel's real estate valuation career dates back to 1981, and has included work with a broad range of property types including multi-family, retail, office, industrial, self-storage, land development, proposed construction, partially-complete projects and distressed property valuations. Special purpose situations have included determining diminution of value, right-of-ways for utilities and/or transportation, water detention facilities, condemnation, religious/educational facilities and communication towers.

Mr. Kunkel has qualified on numerous occasions as an expert witness involving real estate matters in the Circuit Courts of Cook, DuPage, Lake and Will Counties in Illinois, as well as the United States Bankruptcy Court for the Northern District of Illinois. Mr. Kunkel has also testified before the Property Tax Appeal Board for the State of Illinois, the Property Tax Appeal Boards for the Counties of Cook, DuPage and Lake, as well as various planning and zoning commissions in the City of Chicago and surrounding suburban areas.

Mr. Kunkel is an Appraiser Qualifications Board Certified USPAP Instructor, and has served as a course instructor and faculty member for various appraisal courses at The Appraisal Institute, Elgin Community College and Triton College, in addition to being a guest speaker at various real estate related seminars and business meetings. He was also a member of the 1993 Urban Valuation Delegation to Latvia and Russia sponsored by People to People International.

Mr. Kunkel has valuation experience in over a dozen states, has held the MAI designation awarded by the Appraisal Institute since 1989, is a Certified General licensed appraiser, and is a licensed Real Estate Broker in Illinois, holding the commercial/investment designation of CCIM. Mr. Kunkel has also been awarded a Completion Certificate from the American Society of Appraisers (ASA) program entitled "Allocating Components in Going Concern Appraisals".

Professional Associations and Affiliations:
MAI Designation #8128, Appraisal Institute;
Certified General Real Estate Appraiser -- IL#553.000198; IN#CG41400017; WI#2038-10;
CCIM Designation #11909, CCIM Institute of the National Association of Realtors;
Licensed Real Estate Broker -- IL#471.015098;
Member: Illinois Coalition of Appraisal Professionals (ICAP);
Member: Northern IL Commercial Assoc. of Realtors (includes IL and National Associations);
Lifetime Member: National Eagle Scout Association (NESA).

Formal Education:
Bachelor of Arts, Metropolitan State University, St. Paul, Minnesota. Specialized appraisal and real estate education with the Appraisal Institute, ASA and various Realtor associations.

Attachment: packet (2070 : CelluSite, LLC)

COMMON COUNCIL
OF THE
CITY OF MEQUON

ORDINANCE 2016-1488

An Ordinance Amending Chapter 58, Zoning Code of the Mequon Municipal Code Related to Required Side and Rear Offsets of Non-Residential Structures Adjacent to Residentially Zoned Properties

WHEREAS, the Common Council of the City of Mequon previously adopted a Zoning Code that is presently codified in Chapter 58 of the Mequon Municipal Code; and

WHEREAS, the Common Council finds that additional standards for the side and rear offsets of non-residential structures are necessary;

NOW, THEREFORE, THE COMMON COUNCIL OF THE CITY OF MEQUON, OZAUKEE COUNTY, STATE OF WISCONSIN, DO ORDAIN AS FOLLOWS:

SECTION I

Section 58-416, 58-418 and 58-419 of the Mequon Municipal Code is hereby amended as attached.

SECTION IV

The terms and provisions of this ordinance are severable. Should any term or provision of this ordinance be found to be invalid by a court of competent jurisdiction, the remaining terms and provisions shall remain in full force and effect.

SECTION V

All ordinances and parts of ordinances in contravention to this ordinance are hereby repealed.

SECTION VI

This ordinance shall be in full force and effect upon its passage and on the day after its publication.

Attachment: packet (2070 : CelluSite, LLC)

Sec. 58-416. - Building and structure location.

(a)

Purpose and intent. The purpose and intent of regulating building and structure location is as follows:

(1)

To require the provision of a buffer zone between noise-intolerant land uses (e.g. residences, nursing homes, day care centers, schools, churches) and adjacent streets or highways to effectively attenuate noise and buffer such developments from the pollution and hazards attendant to vehicular traffic.

(2)

To require the provision of adequate physical separation between uses to minimize conflict.

(3)

To allow exposure to optimum amounts of light, air, and ventilation.

(4)

To attenuate noise, odors, fumes, and dust generated by land use before they infringe upon adjacent land use.

(5)

To provide aesthetic open space of sufficient size to accommodate landscaping and to soften, compliment, and enhance architectural design of buildings, parking areas, loading facilities, and utilities.

(6)

To provide adequate area for snow piling.

(7)

To insure adequate separation between pedestrian and vehicular circulation.

(8)

To promote cluster development and other internally oriented living, shopping and working environments, and to discourage strip development.

(9)

To provide adequate area to detain, retain, and facilitate surface drainage.

(10)

To protect and preserve the quality and quantity of ground water resources.

(11)

To prevent development which may result in unacceptable non-point source pollution.

(12)

To provide diversified and balanced growth.

(b)

Base setback line. The following base setback lines are hereby established parallel to the centerline of all public streets and highways:

Attachment: packet (2070 : CelluSite, LLC)

(1)

For all streets designated as "local streets", the base setback line shall be located 30 feet from the centerline of such street or 75 feet from the center point of a cul-de-sac unless otherwise specifically established by action of the common council.

(2)

For all streets and highways, other than those designated as "local" streets, a base setback line shall be located at a distance from the centerline of such street or highway equal to one-half the width of its ultimate right-of-way as established by the common council.

(3)

The width of frontage roads shall not be included in the above designated rights-of-way.

(c)

Setbacks. Unless otherwise specified within an individual zoning district or in accordance with section 58-41 <https://www.municode.com/library/wi/mequon/codes/code_of_ordinances?nodeId=PTIICOOR_CH58PLDERE_ARTIIADEN_DIV1GE_S58-41BOAP>, no building or structure shall be erected, constructed, structurally altered, or relocated on a lot closer to the base setback line than the minimum setback distance specified in the established zoning district.

(1)

Frontage roads, service drives and parking areas setback . Frontage roads, service drives, parking areas, etc., shall be set back a minimum of 25 feet from the adjacent base setback line.

(2)

Setback from Lake Michigan Bluff. All permanent structures, including in-ground swimming pools erected or constructed after January 1, 1988, on property that is contiguous to Lake Michigan shall be set back from the top of the bluff a distance based on a slope ratio of two feet horizontal distance to every one foot vertical distance measured from the toe of the bluff. In no case, however, shall a building be set back less than 75 feet from the top edge of bluff at the time of construction. Additions or alterations to structures that were erected or constructed prior to January 1, 1988, on property that is contiguous to Lake Michigan shall in no case reduce the existing setback from the edge of the top of the bluff to the existing structure.

All underground utilities including but not limited to sewer, water, gas, electric, or telephone shall be installed no closer than 75 feet from the top edge of the Lake Michigan bluff. Underground extensions of existing utilities shall not reduce the existing setback from the edge of the bluff if said utilities are closer than 75 feet to the top of the bluff. However, utilities located more than 75 feet from the top of the bluff may be extended underground to structures lacking the 75-foot setback from the top of the bluff. The city does not guarantee, warrant or represent that only those areas which lie within the required setback area from the top of the bluff will be subject to damage resulting from bluff erosion or instability and hereby asserts that

Attachment: packet (2070 : CelluSite, LLC)

there is no liability on the part of the common council, its agencies or employees for any damages that may occur as a result of reliance upon and conformance with this section.

(d)

Setback exceptions.

(1)

Additions to existing buildings which lack the required setback may be allowed if either:

a.

The addition is set back at a distance greater than or equal to the average of the existing building setback and the required setback; or

b.

The addition is set back at a distance at least equal to the building setback and the planning commission determines that the addition will neither impede any likely public improvements nor cause any hardship, inconvenience, or diminution in value to any adjacent properties and further determines that the addition will be harmonious with neighboring properties.

(2)

On corner lots, on record as of the effective date of the ordinance from which this section is derived, the effect of the setback regulations shall not reduce the buildable width of such corner lot to less than 30 feet.

(e)

Offsets. The proximity of any portion of a strucutre to the side or rear lot lines shall be regulated as follows:

(1)

Except as specifically otherwise provided by ordinance, no structure shall hereinafter be erected, structurally altered, or relocated so that it is closer to any lot line than the offset distance specified by the regulations for the district in which it is located:

(2) No non-residential structure shall be erected, structurally altered, or relocated on any propoerty so that it is closer to the lot line of a residentially zoned property than the greater of (i) the distance set forth in paragraph (1) or (ii) one times the height of the non-residential structure as deemed pursuant to section 58-418.

(3) Offset Exceptions.

a.

In the case of any lot of record which has a minimum average width less than that required by the district in which it is located, the offset from a side lot line may be reduced proportionally to the ratio of the actual minimum average width and the required minimum average width (i.e. actual width/required width)

Attachment: packet (2070 : CelluSite, LLC)

provided, however, that no offset shall in any case be less than 75 percent of the required offset.

b.

Where a lot abuts a district boundary line, the offset from such line in the district of less restrictive use shall not be less than that required for the district of more restrictive use.

c.

The required offset area on one property may be reduced if the offset area on the adjoining property is increased by deed restriction to include the required offset area plus the equivalent amount of offset area resulting from the adjacent reduction.

d.

In the case of attached single-family, row, multiple-family, commercial, or industrial use structures, two or more buildings on adjoining lots may be erected with common or directly adjoining walls provided the requirements of the state industrial code relative to such construction are complied with and provided that at both ends of such row type buildings the applicable offset requirements shall be complied with.

e. Strucutres that are specifically Structures that are specifically excluded from offset regulations by ordinance including those structures excluded by Sec. 58-419 are not subject to subsection (e).

f. Garages allowed as accessory uses to residences are subject to subsection (e)(1) but not subsection (e)(2) or (e)(3).

(2)

Any required offset area shall be landscaped and kept clean and free from the accumulation of debris or refuse, and shall not be used for the storage or display of equipment, products, vehicles, or any other material.

(f)

Driveway offsets. Residential driveways shall be located no closer than three feet to a side or rear property line unless written approval is granted by the adjacent property owner.

(Code 1957, § 3.03(5); Ord. No. 96-878, 5-14-1996; Ord. No. 96-890, 6-25-1996; Ord. No. 2003-1065, § I, 4-8-2003; Ord. No. 2008-1238, § I, 4-8-2008)

Sec. 58-418. - Height regulations.

(a)

Maximum height. No structure shall be erected or structurally altered to a height in excess of that specified in the structure's zoning district except as provided below in this section.

(b)

Determining height. The height of a structure shall be the vertical distance measured from the mean elevation of the finished grade at the front of the structure to the highest point of the building.

Attachment: packet (2070 : CelluSite, LLC)

(c)

Exceptions. The following shall be excepted from the height regulations of all districts:

(1)

Chimneys and flues.

(2)

Accessory farm buildings, not to exceed 60 feet in height on lots of three acres or more in area.

(3)

Electrical transmission and distribution facilities.

(4)

Silos for agricultural purposes.

(5)

Subject to the approval of the planning commission, cooling towers, elevator bulk heads, fire towers, monuments, penthouses, stacks, scenery lofts, tanks, water towers, ornamental towers, spires, and necessary mechanical appurtenances.

(6)

Radio and television antennas. In no case, however, shall any radio or television antenna be erected or structurally altered to an overall height in excess of 25 feet or to a height in excess of five feet above the highest point on the roof of the principal structure located on the same property, whichever is greater. Furthermore, the overall height shall not exceed the distance measured in a straight line to the nearest property line.

(7)

Television antennas intended for the common use of a subdivision, group project development, or multiple family development or for use in conjunction with a closed circuit television system serving a school, church, public utility facility, public administrative office, public service building or other similar type of facility shall be subject to the approval of the building inspector. Except as otherwise regulated herein, such television antennas shall not be erected or structurally altered to a height in excess of 35 feet. In no case, however, shall the overall height exceed the distance measured in a straight line to the nearest property line.

(8)

Radio towers and antennas, provided that such towers and antennas are intended for the use of appropriately licensed amateur radio operators or for use as part of a commercial of industrial enterprise being conducted on an appropriately zoned property, shall be subject to the approval of the building inspector. Except as otherwise regulated herein, such radio towers or antennas shall not be erected or structurally altered to a height in excess of 75 feet. In no case, however, shall the overall height exceed the distance measured in a straight line to the nearest property line.

(9)

Structures for which height regulations are prohibited by state law.

Attachment: packet (2070 : CelluSite, LLC)

(d)

Increase permitted . The maximum height of any structure may be increased up to ten feet if offset and setbacks are increased by one foot for each additional foot of structural height exceeding the standard district requirement.

(Code 1957, § 3.03(7); Ord. No. 2008-1238, § I, 4-8-2008)

- **Sec. 58-419. - Structures other than buildings.**

(a)

All structures shall be subject to the setback, offset, building size and open space requirements of this chapter expect as otherwise specifically provided by ordinance.

(b)

Structures not classified as buildings and less than six inches in height from the surface of the ground shall not require a building permit nor be subject to the setback or offset requirements of this chapter except as otherwisespecifically provided by ordinance.

(c)

Fences, walls and other architectural screening devices, when anchored to supports, imbedded in the ground shall be considered permanent structures and shall be subject to the following:

(1)

No structure shall be permitted that by reason of noise, dust, odor, appearance or other objectionable factor creates a nuisance or a substantial adverse effect upon the property value or reasonable enjoyment of the surrounding property.

(2)

Any such structure less than 4½ feet in height may be permitted anywhere on the lot.

(3)

Any such structure in excess of 4½ feet in height may be permitted provided it conforms to the open area, height, setback, and offset requirements of the zoning district in which it is located.

(4)

Any such structure in excess of 4½ feet, but not more than six feet in height, may be permitted to within five feet of a street right-of-way provided the side facing the street line is attractively landscaped and subject to approval by the Building Inspector.

(5)

Any such structure in excess of 4½ feet in height may be permitted closer than the required offset from an adjoining lot line, other than a street line, with the written consent of the adjoining property owner. Such structure shall not project forward of the building setback line.

(d)

Basketball structures (poles) may be located within the setback and/or offset areas if the basketball structure is located closer to the house than to the side, rear, or front property lines. Other recreational and miscellaneous structures greater than 4½ feet in height shall be permitted provided such structure conforms to the open space, height, offset and

Attachment: packet (2070 : CelluSite, LLC)

setback requirement of the zoning district in which it is located and also conforms with section 58-171 <https://www.municode.com/library/wi/mequon/codes/code_of_ordinances?nodeId=PTIICOOR_CH58PLDERE_ARTIVZO_DIV1GE_S58-171USRE>.

(Code 1957, § 3.03(8); Ord. No. 96-878, 5-14-1996)

Approved by: Dan Abendroth, Mayor

Date Approved: January 10, 2017

I certify that the foregoing Ordinance was adopted by the Common Council of the City of Mequon, Wisconsin, at a meeting held on January 10, 2017.

Caroline Fochs, City Clerk

Published: _____

Attachment: packet (2070 : CelluSite, LLC)

City of Mequon

11333 N. Cedarburg Rd
Mequon, WI 53092-1930
Phone: 262-236-2902
Fax: 262-242-9655

www.ci.mequon.wi.us

Office of Community Development

TO: **Planning Commission**

FROM: **JAC ZADER, ASSISTANT DIRECTOR COMMUNITY DEVELOPMENT**

DATE: **January 11, 2017**

SUBJECT: **Mallary & Zimmerman for Forward Dental. The applicant is seeking exceptions to the Town Center Window Area Obstructions per section 58-301(1)(2)(c) for the property located at 6048 W. Mequon Road (Forward Dental).**

Applicant:	William Scott
Status of Applicant:	Agent
Requested:	Window Coverage Exception
Existing Zoning:	Town Center (TC)
Land Use Plan:	Town Center (TC)
Lot size:	3 Acres
Location:	6048 W. Mequon Road
District:	#2
Tax Key:	#14-050-02-050.03

Background: The applicant is requesting an exception to section 58-301(1)(2)a of the zoning code to allow for the use of window blinds at the Forward Dental tenant space at 6048 W Mequon Road. The Common Council adopted Ordinance 2016-1479 (see attached) in November of 2016 that allows the Planning Commission to approve window area obstructions of types and amounts not specified in section 58-301(1)(2)a for first floor windows for certain uses upon finding that strict compliance is impractical under the circumstances as long as the proposal includes amenities that address the adverse effects, if any, of the exception. The Planning Commission denied a Building/Site Amendment request to use the window blinds in December 7, 2015.

Window Coverage Exception:
The applicant is requesting the use of window blinds on the south and west elevation of the Forward Dental tenant space in the south building at the Mequon Town Center development. The applicant states that strict compliance with the new Ordinance is impracticable because of privacy concerns related to the use as a dental office. The applicant also states that the blinds also serve as a mechanism to reduce glare and solar heat gain into the tenant space. The request states that the use of the blinds will be limited to certain hours and only when they are needed to protect patient privacy, modulate light for the patient or dental practitioner or reduce passive solar gain. In order to mitigate any adverse impacts of the blinds, the applicant is proposing to incorporate other design elements that will, among other things, contribute to the overall building composition and enhance the curb appeal of the tenant space. This includes the use of awnings on the south, west and north elevation of the building and decorative window graphics that would provide visual interest to the window areas when the blinds are in use.

Staff has worked closely with the applicant to come up with a solution that balances the needs of the business while achieving compliance with the goals and standards of the Town Center. While the current design still needs improvement, staff in general is supportive of the use of the awnings and graphics submitted by the applicant. Staff will continue to work with the applicant to further refine certain elements of the plan including the size and scale of the awnings and the while the horizontal graphic is band is acceptable; staff would like to further refine the repetition of the verbiage on the windows to ensure the level of signage does not appear cluttered.

Staff Recommendation: Planning staff recommends **approval** of the window display exception based on the following condition:

1. Staff review and approval of the final design features including all window graphics and awnings.
2. Future modifications to the window blinds and approved design features shall require Planning Commission approval.
3. The window blinds shall only be in use between the hours of 7:00 AM and 7:00 PM and only when the necessary due to:
    - Privacy concerns
    - To mitigate the impact of light on the patient or dental practitioner
    - To limit the impact of solar heat gain into the tenant space

Attachments:
Packet (PDF)

Forward Dental

AC	Arrival Corridor	LTD	Limited Use
A-1	Agricultural Preserve	OA	Agricultural Overlay
A-2	General Agricultural	PUD	Planned Unit Development Overlay
B-1	Neighborhood Business	P-1	Park & Recreation
B-2	Community Business	R-1	Single-Family Residential (5 Ac. Min.)
B-3	Office & Service Business	R-1B	Single-Family Residential (2.5 Ac. Min.)
B-4	Business Park	R-2	Single-Family Residential (2.0 Ac. Min.)
B-5	Light Industrial	R-2B	Single-Family Residential (1.5 Ac. Min.)
B-6	Rural Industrial	R-3	Single-Family Residential (1.0 Ac. Min.)
B-7	Rural Business	R-4	Single-Family Residential (3/4 Ac. Min.)
C-1	Shoreland/Wetland Conservancy	R-5	Single-Family Residential (1/2 Ac. Min.)
C-2	General Conservancy	R-6	Single-Family Residential (4 du/Ac)
CGO	Central Growth Overlay	RM	Multi-Family Residential
FFO	Flood Fringe Overlay	TC	Town Center
FW	Floodway	TDR	Transfer of Development Rights
IPS	Institutional & Public Service		

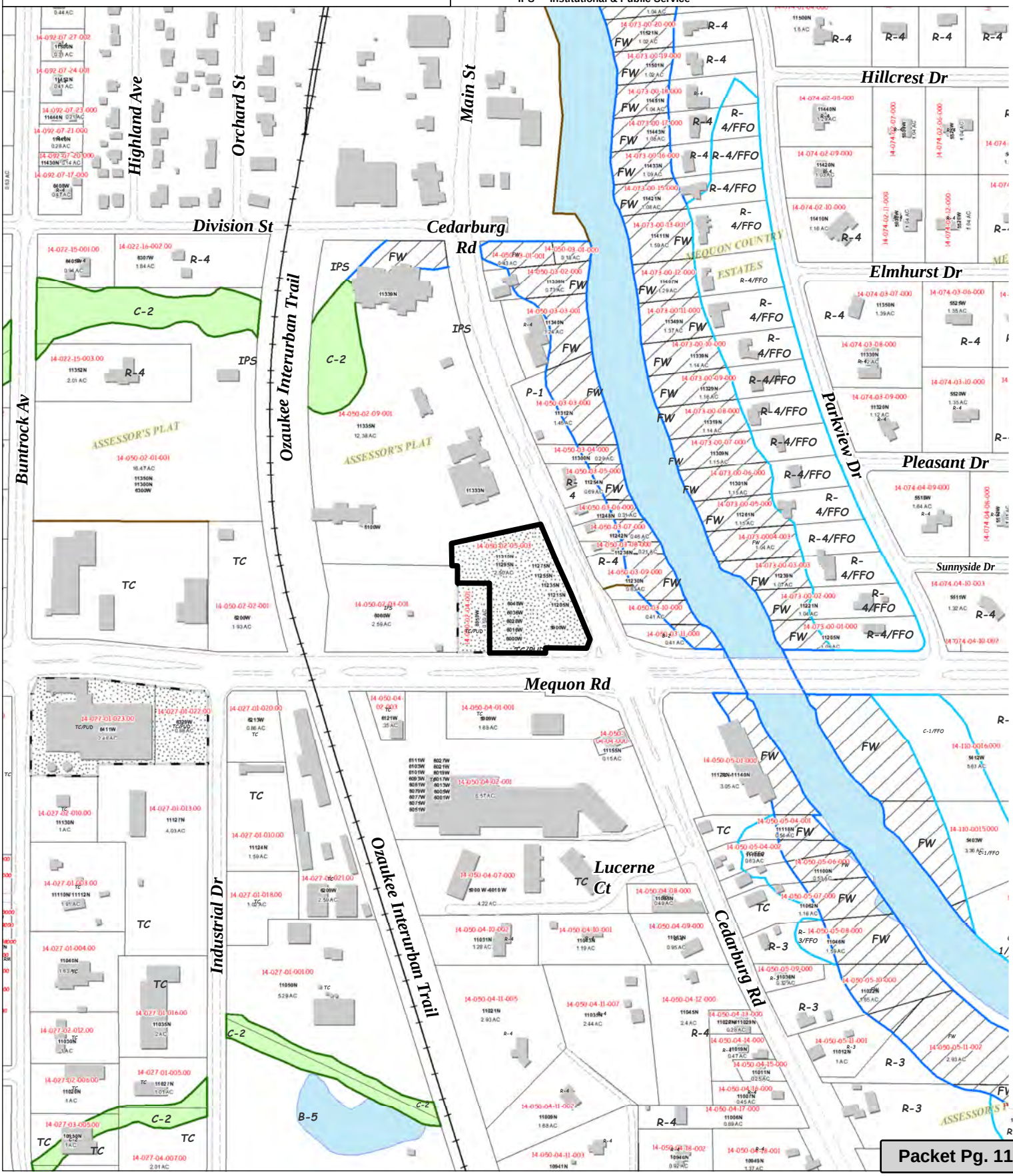

Attachment: Packet (2071 : Mallary & Zimmerman for Forward Dental)

Forward Dental

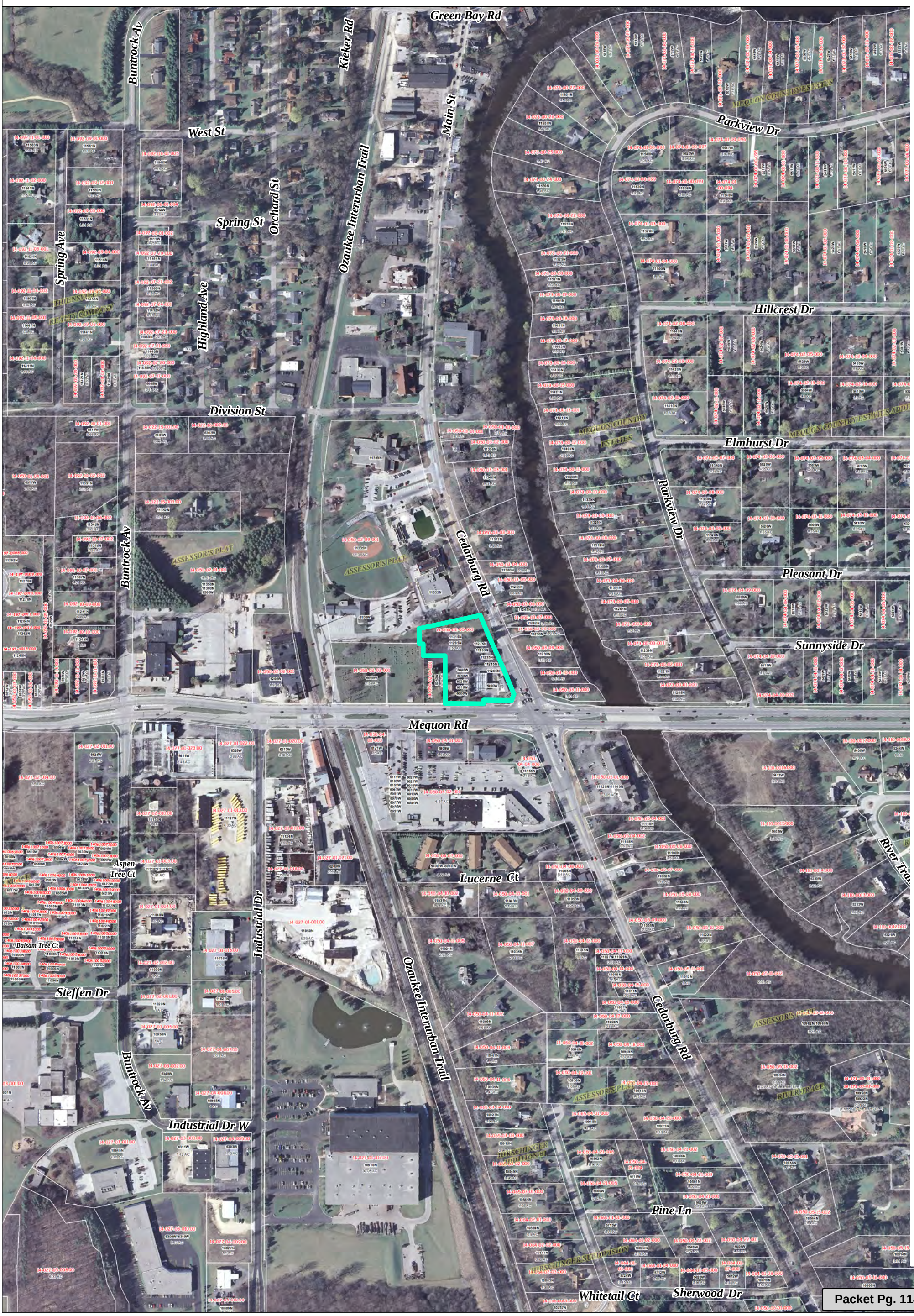

Application of American Dental Partners of Wisconsin, LLC dba ForwardDental

Minor Request: Exception to Window Area Obstructions; 58-301(l)(2)(c)

December 12, 2016

American Dental Partners of Wisconsin, LLC dba ForwardDental ("ForwardDental") seeks the Planning Commission's approval of an Exception to the limitation on Window Area Obstructions in section 58-301(l)(2) as allowed by the text amendment provision known as section 58-301(l)(2)(c). The specific approval sought is a grant of a section 58-301(l)(2)(c) exception to use window blinds in the first floor property located at 6048 West Mequon Road (the "Property") for so long as the Property is used for any dental use, as set forth in this Application.

Historical Context of Request.

Medical clinics, including dental clinics, are a permitted use in the Town Center District and Arrival Corridor District, and neither district contains specific development standards for a dental clinic use. When the Applicant received plan approvals and building permits to build-out its leased space at the Property in the Town Center District, window blinds were specified in the approved plans and were not denied by the City. Consequently, the Applicant constructed its build-out according to a build-out design that was dependent on the window blinds specified in the approved plans. When the occupancy permit was issued, it purported to deny use of window blinds. However, by that date the build-out was essentially complete, including a sophisticated network of plumbing, electrical and communications lines installed beneath the concrete floor with risers to serve the precise locations of the operatories and dental chairs adjacent to the windows, as shown in the approved plan. The Applicant used the blinds with no issue raised by the City from occupancy on June 17, 2015 until December 9, 2015, which was the day after the Planning Commission heard and denied the Applicant's request for window skins at the Property. The Applicant filed an appeal with the Mequon Board of Appeals to seek permission to use window blinds and that appeal was and is currently stayed pending the outcome of Common Council deliberations on window obstructions and this request for approval. In recognition that the pre-existing ordinance did not provide sufficient flexibility to serve legitimate business needs, the Common Council adopted a text amendment in November 2016 which clarifies certain permitted window obstructions, more than doubles the allowed area of permitted obstructions and creates an exception to the limitations on window area obstruction. The exception allows the Planning Commission to approve unspecified types and unlimited amounts of window obstructions upon a finding that (i) strict compliance is impractical under the circumstances and (ii) the proposal includes amenities that address the adverse effects, if any, of the exception (see Section 58-301(l)(2)(c).

Attachment: Packet (2071 : Mallary & Zimmerman for Forward Dental)

Required Findings.

A. Strict Compliance is Impracticable Under the Circumstances.

Strict compliance with limitations on window area obstructions is impracticable under the circumstances for the following reasons:

1. The business conducted is a dental practice. Dental practices must provide privacy to their patients to meet patient expectations, credentialing requirements, state and federal laws and to be competitive with accepted industry practice. The building location is adjacent to the sidewalk, where pedestrians pass within inches of the windows, and just off a signal-controlled intersection of a State Highway, where cars pass close by and temporarily come to rest within yards of the windows. Many people pass by the Property each day. Transparent windows that allow two way views would not afford the privacy that is required at certain times and locations at this dental facility.
2. The windows allow entry of significant solar energy in the form of heat and light. The window blinds serve as a convenient and low cost regulating mechanism to control entry of solar energy in accordance with demands based on occupant comfort and dental practitioners' needs to clearly see dental instruments, x-rays and computer displays. The solar energy entering the windows is great enough to cause certain dental preparations to cure prematurely, thus rendering the dental work and patient treatment unacceptable.
3. The building was designed to be dependent on window blinds, was constructed in accordance with approved architectural plans that clearly state blinds would be present in all exterior windows and was constructed pursuant to a building permit that did not contain any restriction on window blinds. As a result, blinds must be closed at certain times for reasons of privacy and to modulate light and heat. It is not practicable to close down the business for the considerable time required to renovate the interior to eliminate the need for window blinds. It is not practicable to renovate the interior to eliminate the need for window blinds because that would require removal and repositioning of all interior walls and various electrical, plumbing and communications systems that run beneath the floor to each operatory and dental chair location, at the cost of over $750,000.00.

B. Adverse Effects, If Any.

If any adverse effects are created by the requested exception to allow window blinds, amenities are included in the Applicant's proposal to address the adverse effects. However, section 58-301(l)(2)(c) recognizes that adverse effects are not always created by window obstructions. That is the meaning of the phrase, "…the adverse effects, if any…" in section 58-301(l)(2)(c).

Attachment: Packet (2071 : Mallary & Zimmerman for Forward Dental)

The Applicant takes the position that adverse effects are not created by its proposed use of window blinds for the following reasons:

1. Window blinds are a common and not unsightly component of dental practice and other buildings.
2. Window blinds at the Property provide an interesting and active compliment to the varying degrees of window transparency and window obstructions present at other structures in the vicinity of the Property. The activity caused by intermittently raising or lowering of blinds in individual windows at the Property adds interest for passing observers. Taken together, the variety of transparency and window obstructions at the various types of businesses, as consistent with their various business objectives and identities, presents an interesting outward appeal to passing observers.
3. Window blinds have been in use in all exterior windows at the Property since June 2015 and not a single resident or pedestrian complaint has been received about using the blinds. In addition to three citations received from City Inspectors for using window blinds, complaints were received from patients (including health care professionals) who refused to be seen in operatories with windows due to privacy concerns. Additionally, there were numerous patient and staff concerns related to heat and light.
4. Window blinds are individually controlled in individual windows as necessary and will not be used at the Property around the clock, but will be raised or lowered intermittently for use as needed during working hours, as provided in the proposal, below.

<u>Proposal.</u>

A. The Applicant seeks an exception to use the window blinds in all exterior windows as provided in this proposal and as shown the architectural plans dated 12/16/14 (Exhibit A) without any added amenities other than those required by the building permits under which the dental facility was constructed and built-out. The proposal is to use window blinds as follows:
    1. Window blinds will not be used at the Property around the clock. Window blinds will be used only during working hours of 7 am to 7 pm.
    2. During work hours, window blinds will not be permanently closed, but instead will be opened only when and where they are not needed.
    3. During work hours, window blinds will be used at the Property only as and where necessary to:
        a. protect patient privacy;
        b. modulate light to accommodate patient requests;
        c. modulate light to accommodate the needs of dental practitioners to clearly see their instruments and computer displays, read x-rays and to properly perform their dental duties, procedures and preparations; and

Attachment: Packet (2071 : Mallary & Zimmerman for Forward Dental)

d. modulate light as necessary to save energy and increase patient and dentist comfort by reducing the sunlight entering the windows (passive solar gain).

B. Should the Planning Commission determine that that adverse effects would be created by the proposed use of window blinds at the Property such that one or more amenities is required to address the adverse effects, then the Applicant proposes and will accept as a condition the Planning Commission's approval of an exception to allow window blinds, the installation of either or both of the following amenities at the Property:

1. Window Graphics. The design for window graphics, attached as Exhibit B, was developed at the suggestion of City Community Development staff as a decorative means of attracting attention away from the blinds during those times when the window blinds are in use in any of the windows. The window graphics would break up the large expanse of glass to create a more pedestrian friendly, more personal scale. The window graphics would be of uniform width and would cover 36% of the window area on average, with 43% coverage on the south side and 53% coverage on the west side. The window graphics would be permanent, translucent, vinyl, films that would adhere to the inside surface of the window. The graphics material has almost no opacity. It is essentially a clear film with texture. There is no light diffusion caused by this vinyl – so it doesn't reduce light or heat coming through the windows. A sample of the material will be provided upon request. If required, the skins would be manufactured and installed substantially as shown in Exhibit B. If required as a condition of approval of the requested exception, the window graphics would require periodic replacement to address significant deterioration or wear, resulting in an on-going additional cost.

2. Awnings. The proposed design for decorative awnings, attached as Exhibit C, was developed at the suggestion of City Community Development staff as a pedestrian friendly and decorative means of attracting attention away from the blinds during those times when the window blinds are in use. Awnings are pedestrian friendly because they provide some protection from rain and create visual depth and added detail to enhance curb appeal and the pedestrian experience. The awnings would be canvas material stretched over a fixed aluminum tubing frame that would be attached to the masonry on the building's exterior surface. The awnings would be burgundy in color intended to match the signage on the building exterior. The awnings would protrude approximately 36 inches from the exterior building wall. The awnings would not be large enough to significantly shield the window area to the degree required to modulate light or heat. If required as a condition of approval of the requested exception, the awnings would require periodic replacement to address significant deterioration or wear, resulting in an on-going additional cost.

Attachment: Packet (2071 : Mallary & Zimmerman for Forward Dental)

3. Window Graphics and Awnings. The window graphics and awnings could both be installed (see Exhibit D, attached). If required as a condition of approval of the requested exception, both window graphics and awnings would require periodic replacement to address significant deterioration or wear, resulting in an on-going additional cost.

C. While not required under the terms of the text amendment, ForwardDental's proposal meets the spirit and intent of the ordinance and text amendments, as follows.

1. This Proposal provides three-dimensional and depth-of-field details that contribute to overall building composition and enhance curb appeal and neighborhood value in this mixed-use area. These same details provide a step-up in appearance that enhances the character of Mequon's Civic Campus and creates a more distinguished gateway to the Town Center. The proposed combination of building placement, façade, window areas, and active window blinds are all consistent with enhancing the character of the area and promoting pedestrian character with an emphasis on high quality design.
2. Natural surveillance is promoted to the extent possible without compromising ForwardDental's needs to protect patient privacy, modulate light and heat to accommodate patient requests and provide suitable conditions for dentists to perform their work.
3. The pedestrian character of the area is promoted by providing a varied, three-dimensional appearance and increased depth-of-field perception to make the presence of blinds less apparent when they are closed.
4. Passive solar gain is possible when desired by leaving the blinds open, but can be blocked in warm weather to reduce energy consumption, consistent with the window area goal of protecting the environment.
5. The mix of small, neighborhood scale uses necessary to make the area attract a variety of people is furthered by providing exceptions that allow a dental practice to operate. An eclectic mix of uses, including professional services such as ForwardDental, is necessary to attract a greater variety of people to the district because it provides them opportunities to participate in multiple compatible purposes, which is necessary to make the district more robust.
6. The dental chairs and fixtures will be visible to pedestrians when and where the blinds are open, satisfying the purpose of displaying business products and services to the extent practicable under the circumstances. However, the display of business products and services that may serve retail shops well is not of universal appeal to all permitted uses in the district. It is because dental clinics and other permitted uses may require privacy or customer comfort at certain times that the exception in section 58-301(l)(2)(c) was created.

Attachment: Packet (2071 : Mallary & Zimmerman for Forward Dental)

Conclusion.

The Planning Commission may grant the section 58-301(l)(2)(c) exception to accommodate the Applicant's permitted use because strict compliance is impractical under the circumstances and the proposal includes amenities that address any adverse effects of the exception. A grant of the requested exception would be consistent with the purposes of the district and of windows in the district and would help to achieve the originally envisioned mix of tastefully designed, small, neighborhood scale uses within the district. Window blinds installed and used as provided in this proposal offer the optimal solution under the circumstances to balance ForwardDental's unique circumstances and the needs of its patients and staff with the Property's constraints and still achieve the spirit and intent of the ordinance.

Attachment: Packet (2071 : Mallary & Zimmerman for Forward Dental)

1 **Entrance Perspective View**

Scale: NTS

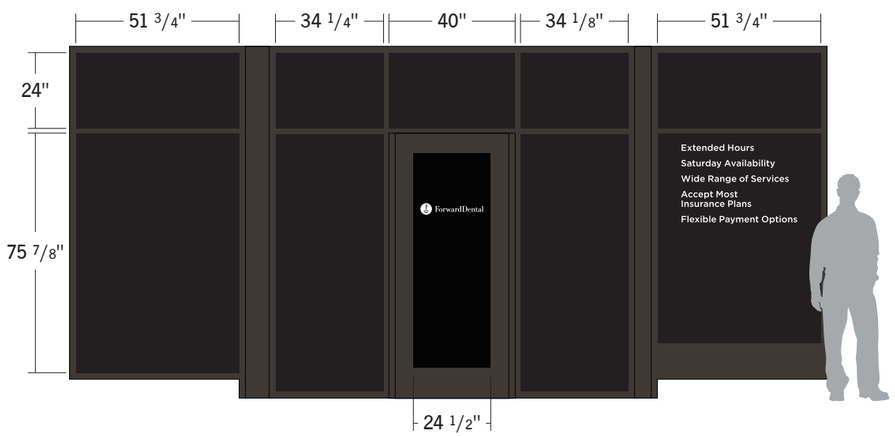

2 **Window Graphics**

Scale: 1/4"=1'-0"

Description

Ⓐ **Window Graphics**

MATTE WHITE (220-20)
APPLIED FIRST SURFACE

DIGITALLY PRINTED, CONTOUR CUT, MATTE LAMINATE - APPLIED FIRST SURFACE

3 **Typical Window Graphics**

Scale: 1/2"=1'-0"

2'' Extended Hours

Saturday Availability

Wide Range of Services

Accept Most
Insurance Plans

Flexible Payment Options

3 **Graphics**

Scale: 3/4"=1'-0" Scale: 1/2"=1'-0"

Project:
Forward Dental
Mequon, WI

Designer: BW
Job Number: 64787
Date: 10.19.2015

Rev. 1: 06.09.15 DG
Rev. 2: 08.17.15 BW
Rev. 3: 08.28.15 BW
Rev. 4: 08.31.15 BW
Rev. 5: 09.03.15 BW
Rev. 6: 09.09.15 BW
Rev. 7: 10.19.15 BW
Rev. 8: 10.17.16 DG
Rev. 9: 10.19.16 DG
Rev. 10: 11.07.16
Rev. 11: 11.08.16 DG
Rev. 12: 11.30.16 DG
Rev. 13: 01.05.17 DG
Rev. 14: 01.06.17 DG

archetype

9635 Girard Ave S.
Minneapolis, Minnesota 55431

952 641 9600

archetypesign.com

Contact:
Gary Stemler
952 641 9603
garys@archetypesign.com

This print is meant as a representation of a sign show vin consideration of being manufactured by Archetype. Materials may influence final result. Samples available upon request. Graphic Design time is included in the total purchase price. Designs contained herein are not meant to be exhibited to others outside of included parties and employees. Designs received from Archetype may not be manufactured by others without reimbursement for time spent in the creation of these designs or any resemblance. Drawings may contain elements considered artistic intellectual property of Steve Carpenter, owner. ©Archetype

Approved:

Type:

Description:
Window Graphics

Packet Pg

1 **West Elevation (Side)**

Scale: 1/8'' = 1'-0''

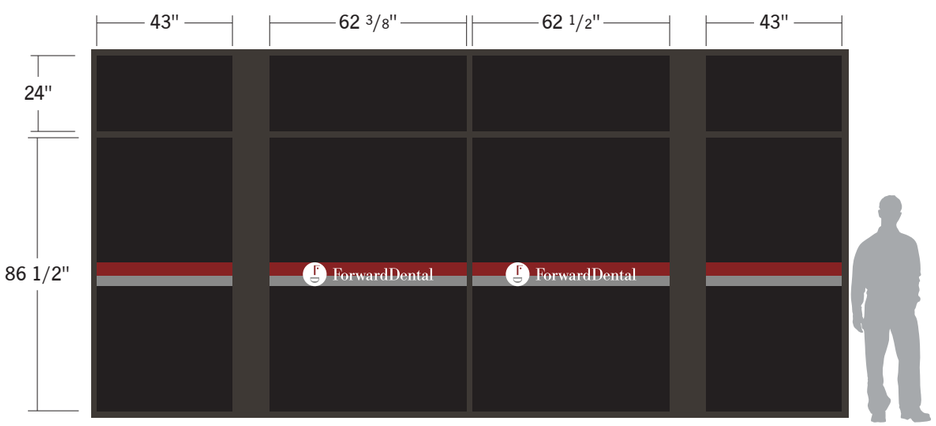

2 **Window Graphics**

Scale: 1/4"=1'-0"

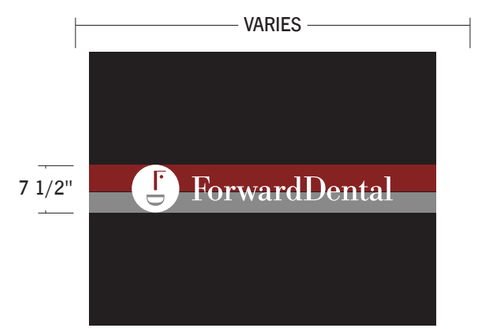

3 **Typical Window Graphics**

Scale: 1/2"=1'-0"

Description

(A) Window Graphics

DIGITALLY PRINTED, CONTOUR CUT, MATTE LAMINATE - APPLIED FIRST SURFACE

3.c.a

Project:
Forward Dental
Mequon, WI

Designer: BW
Job Number: 64787
Date: 09.09.2015

Rev. 1: 06.09.15 DG
Rev. 2: 08.17.15 BW
Rev. 3: 08.28.15 BW
Rev. 4: 08.31.15 BW
Rev. 5: 09.03.15 BW
Rev. 6: 09.09.15 BW
Rev. 7: 10.19.15 BW
Rev. 8: 10.17.16 DG
Rev. 9: 10.19.16 DG
Rev. 10: 11.07.16
Rev. 11: 11.08.16 DG
Rev. 12: 11.30.16 DG
Rev. 13: 01.05.17 DG
Rev. 14: 01.06.17 DG

archetype

9635 Girard Ave S.
Minneapolis, Minnesota 55431

952 641 9600

archetypesign.com

Contact:
Gary Stemler
952 641 9603
garys@archetypesign.com

This print is meant as a representation of a sign show vin consideration of being manufactured by Archetype. Materials may influence final result. Samples available upon request. Graphic Design time is included in the total purchase price. Designs contained herein are not meant to be exhibited to others outside of included parties and employees. Designs received from Archetype may not be manufactured by others without reimbursement for time spent in the creation of these designs or any resemblance. Drawings may contain elements considered artistic intellectual property of Steve Carpenter, owner. ©Archetype

Approved:

Type:

Description:
Window Graphics

1 **South Elevation (Traffic Side)**

Scale: 1/8'' = 1'-0''

Description

(A) Window Graphics

DIGITALLY PRINTED, CONTOUR CUT, MATTE LAMINATE - APPLIED FIRST SURFACE

3 **Typical Window Graphics**

Scale: 1/2"=1'-0"

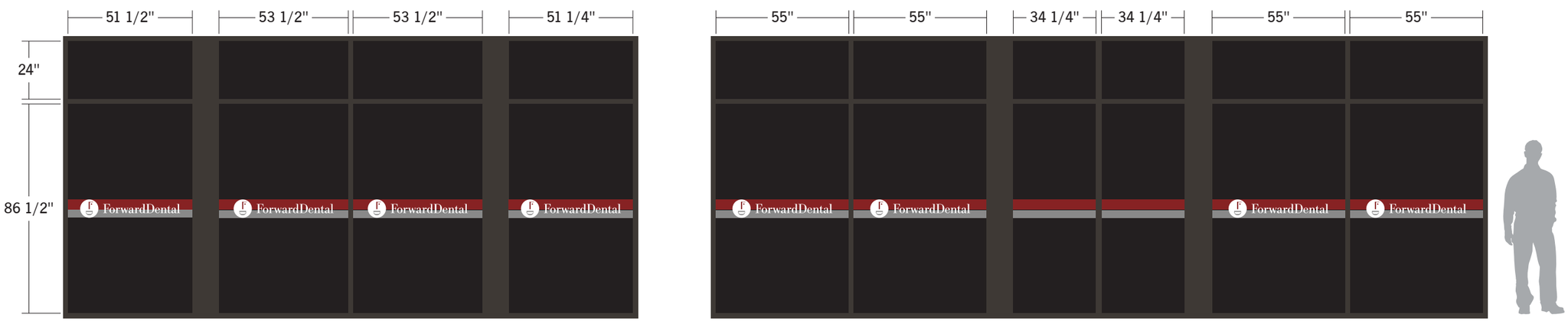

2 **Window Graphics**

Scale: 1/4"=1'-0"

Project:
Forward Dental
Mequon, WI

Designer: BW
Job Number: 64787
Date: 09.09.2015

Rev. 1: 06.09.15 DG
Rev. 2: 08.17.15 BW
Rev. 3: 08.28.15 BW
Rev. 4: 08.31.15 BW
Rev. 5: 09.03.15 BW
Rev. 6: 09.09.15 BW
Rev. 7: 10.19.15 BW
Rev. 8: 10.17.16 DG
Rev. 9: 10.19.16 DG
Rev. 10: 11.07.16
Rev. 11: 11.08.16 DG
Rev. 12: 11.30.16 DG
Rev. 13: 01.05.17 DG
Rev. 14: 01.06.17 DG

archetype

9635 Girard Ave S.
Minneapolis, Minnesota 55431

952 641 9600

archetypesign.com

Contact:
Gary Stemler
952 641 9603
garys@archetypesign.com

This print is meant as a representation of a sign show vin consideration of being manufactured by Archetype. Materials may influence final result. Samples available upon request. Graphic Design time is included in the total purchase price. Designs contained herein are not meant to be exhibited to others outside of included parties and employees. Designs received from Archetype may not be manufactured by others without reimbursement for time spent in the creation of these designs or any resemblance. Drawings may contain elements considered artistic intellectual property of Steve Carpenter, owner. ©Archetype

Approved:

Type:

Description:
Window Graphics

ALL DIMENSIONS MUST BE FIELD VERIFIED PRIOR TO FABRICATION

1 **Entrance Perspective View**

Scale: NTS

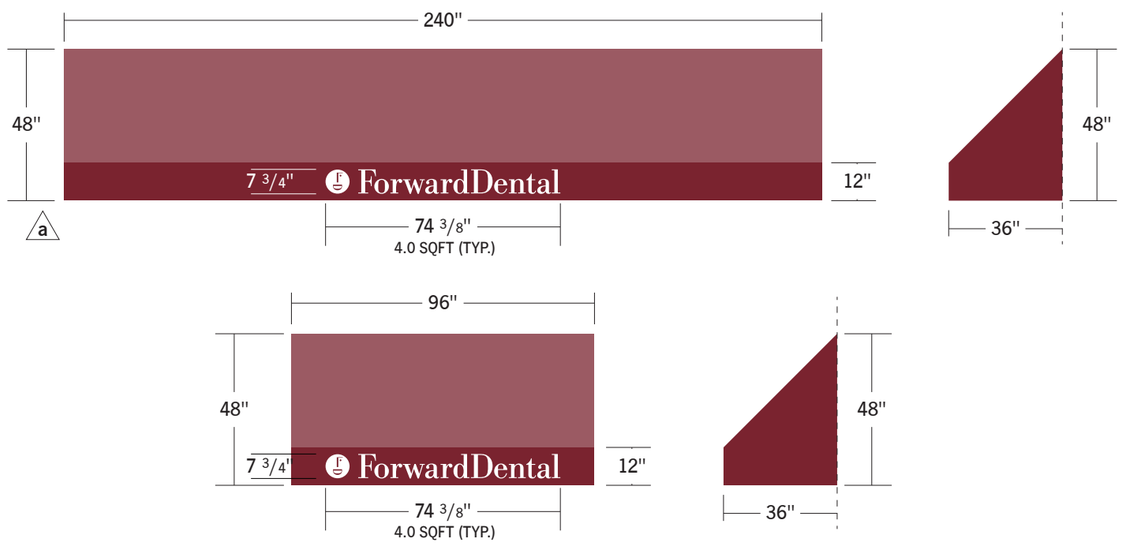

2 **Awnings**

Scale: 1/4"=1'-0"

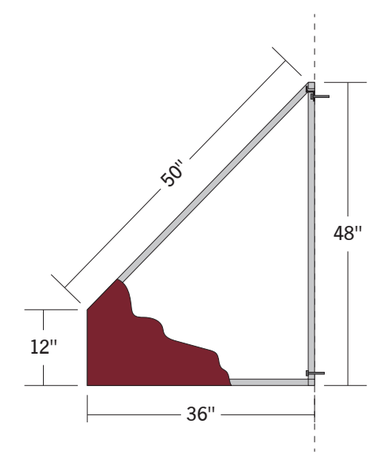

3 **Detail**

Scale: 1/2"=1'-0"

Description

A Awning

1'' SQAURE ALUMINUM TUBE FRAME
BURGUNDY CANVAS AWNING
MATERIAL WITH HEAT-SET WHITE VINYL
GRAPHICS APPLIED TO VALENCE
AREA OF AWNING

Install

MOUNTED TO WALL OVER UPPER
WINDOWS
USING MATIONRY ANCHORS AND
Z-CLIPS

Project:
Forward Dental
Mequon, WI

Designer: BW
Job Number: 64787
Date: 10.19.2015

Rev. 1: 06.09.15 DG
Rev. 2: 08.17.15 BW
Rev. 3: 08.28.15 BW
Rev. 4: 08.31.15 BW
Rev. 5: 09.03.15 BW
Rev. 6: 09.09.15 BW
Rev. 7: 10.19.15 BW
Rev. 8: 10.17.16 DG
Rev. 9: 10.19.16 DG
Rev. 10: 11.07.16
Rev. 11: 11.08.16 DG
Rev. 12: 11.30.16 DG
Rev. 13: 01.05.17 DG

archetype

9635 Girard Ave S.
Minneapolis, Minnesota 55431

952 641 9600

archetypesign.com

Contact:
Gary Stemler
952 641 9603
garys@archetypesign.com

This print is meant as a representation of a sign show vin consideration of being manufactured by Archetype. Materials may influence final result. Samples available upon request. Graphic Design time is included in the total purchase price. Designs contained herein are not meant to be exhibited to others outside of included parties and employees. Designs received from Archetype may not be manufactured by others without reimbursement for time spent in the creation of these designs or any resemblance. Drawings may contain elements considered artistic intellectual property of Steve Carpenter, owner. ©Archetype

Approved:

Type:

Description:
Awning

Packet Pg

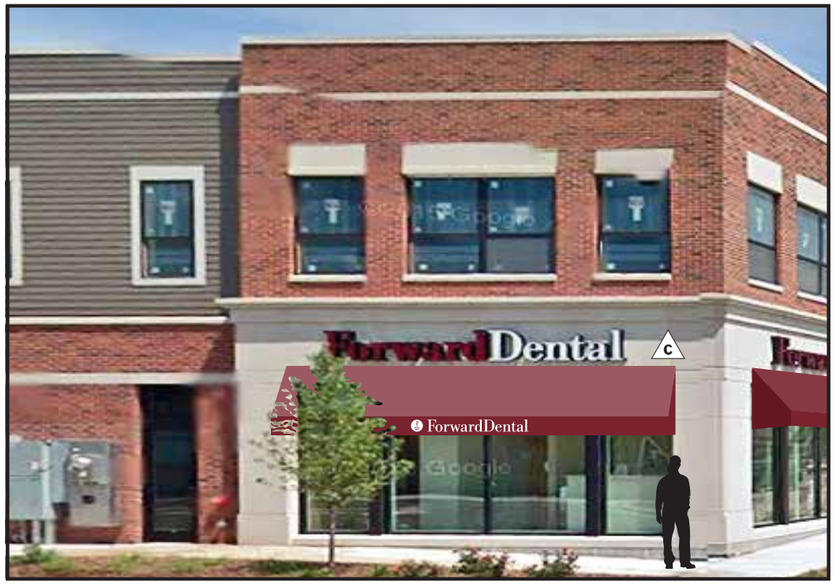

ALL DIMENSIONS MUST BE FIELD VERIFIED PRIOR TO FABRICATION

1 **West Elevation (Side)**

Scale: 1/8'' = 1'-0''

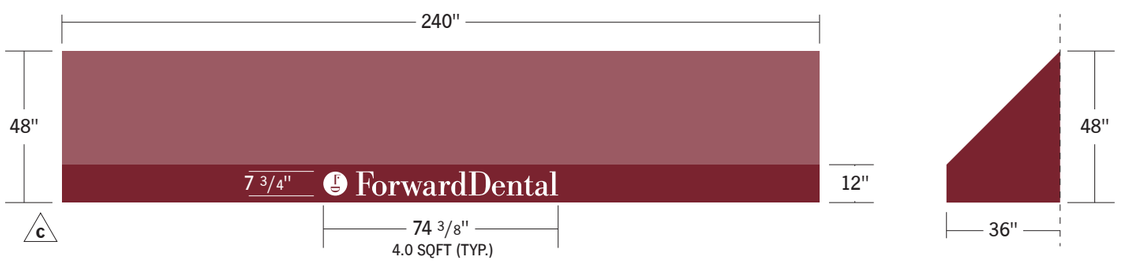

2 **Awnings**

Scale: 1/4"=1'-0"

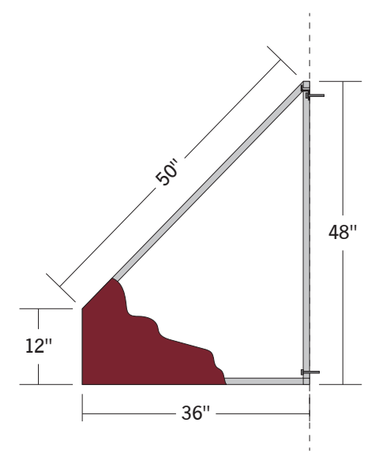

3 **Detail**

Scale: 1/2"=1'-0"

Description

A Awning

1'' SQAURE ALUMINUM TUBE FRAME
BURGUNDY CANVAS AWNING
MATERIAL WITH HEAT-SET WHITE VINYL
GRAPHICS APPLIED TO VALENCE
AREA OF AWNING

Install

MOUNTED TO WALL OVER UPPER
WINDOWS
USING MATIONRY ANCHORS AND
Z-CLIPS

Project:
Forward Dental
Mequon, WI

Designer: BW
Job Number: 64787
Date: 09.09.2015

Rev. 1: 06.09.15 DG
Rev. 2: 08.17.15 BW
Rev. 3: 08.28.15 BW
Rev. 4: 08.31.15 BW
Rev. 5: 09.03.15 BW
Rev. 6: 09.09.15 BW
Rev. 7: 10.19.15 BW
Rev. 8: 10.17.16 DG
Rev. 9: 10.19.16 DG
Rev. 10: 11.07.16
Rev. 11: 11.08.16 DG
Rev. 12: 11.30.16 DG
Rev. 13: 01.05.17 DG

archetype
9635 Girard Ave S.
Minneapolis, Minnesota 55431
952 641 9600
archetypesign.com

Contact:
Gary Stemler
952 641 9603
garys@archetypesign.com

This print is meant as a representation of a sign show vin consideration of being manufactured by Archetype. Materials may influence final result. Samples available upon request. Graphic Design time is included in the total purchase price. Designs contained herein are not meant to be exhibited to others outside of included parties and employees. Designs received from Archetype may not be manufactured by others without reimbursement for time spent in the creation of these designs or any resemblance. Drawings may contain elements considered artistic intellectual property of Steve Carpenter, owner. ©Archetype

Approved:

Type:

Description:
Awning

Attachment: Packet (2071 : Mallary & Zimmerman for Forward Dental)

ALL DIMENSIONS MUST BE FIELD VERIFIED PRIOR TO FABRICATION

1 **South Elevation (Traffic Side)**

Scale: 1/8'' = 1'-0''

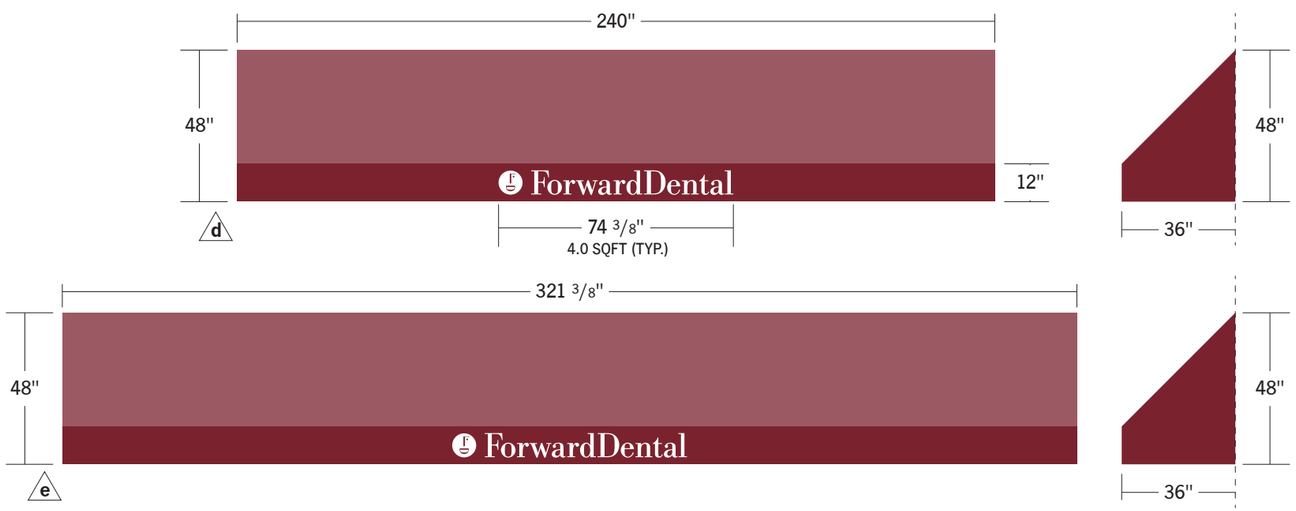

2 **Awnings**

Scale: 1/4"=1'-0"

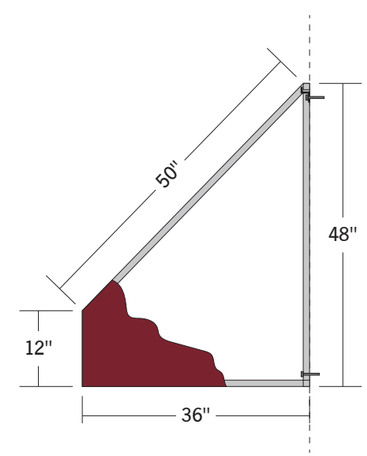

3 **Detail**

Scale: 1/2"=1'-0"

Description

A Awning

1'' SQAURE ALUMINUM TUBE FRAME
BURGUNDY CANVAS AWNING
MATERIAL WITH HEAT-SET WHITE VINYL
GRAPHICS APPLIED TO VALENCE
AREA OF AWNING

Install

MOUNTED TO WALL OVER UPPER
WINDOWS
USING MATIONRY ANCHORS AND
Z-CLIPS

Project:
Forward Dental
Mequon, WI

3.c.a

Designer: BW
Job Number: 64787
Date: 09.09.2015

Rev. 1: 06.09.15 DG
Rev. 2: 08.17.15 BW
Rev. 3: 08.28.15 BW
Rev. 4: 08.31.15 BW
Rev. 5: 09.03.15 BW
Rev. 6: 09.09.15 BW
Rev. 7: 10.19.15 BW
Rev. 8: 10.17.16 DG
Rev. 9: 10.19.16 DG
Rev. 10: 11.07.16
Rev. 11: 11.08.16 DG
Rev. 12: 11.30.16 DG
Rev. 13: 01.05.17 DG

archetype

9635 Girard Ave S.
Minneapolis, Minnesota 55431

952 641 9600

archetypesign.com

Contact:
Gary Stemler
952 641 9603
garys@archetypesign.com

This print is meant as a representation of a sign show vin consideration of being manufactured by Archetype. Materials may influence final result. Samples available upon request. Graphic Design time is included in the total purchase price. Designs contained herein are not meant to be exhibited to others outside of included parties and employees. Designs received from Archetype may not be manufactured by others without reimbursement for time spent in the creation of these designs or any resemblance. Drawings may contain elements considered artistic intellectual property of Steve Carpenter, owner. ©Archetype

Approved:

Type:

Description:
Awning

Exhibit A: Approved Plans

Application of American Dental Partners of Wisconsin, LLC dba ForwardDental

Minor Request: Exception to Window Area Obstructions; 58-301(l)(2)(c)

December 12, 2016

Attachment: Packet (2071 : Mallary & Zimmerman for Forward Dental)

AMERICAN DENTAL PARTNERS

FORWARD DENTAL; MEQUON, WI

ABBREVIATIONS:

AFF	ABOVE FINISHED FLOOR
ACT	ACOUSTICAL CEILING TILE
ADD	ADDITIONAL
ADJ	ADJUSTABLE, ADJACENT
AC	AIR CONDITIONING
AHU	AIR HANDLING UNIT
ALT	ALTERNATE
ALUM	ALUMINUM
ANOD	ANODIZED
AP	ACCESS PANEL
APPROX	APPROXIMATE
ARCH	ARCHITECT(URAL)
AVG	AVERAGE
BSMT	BASEMENT
BRG	BEARING
BIT	BITUMINOUS
BLKG	BLOCKING
BD	BOARD
BO	BOTTOM OF
BLDG	BUILDING
BUR	BUILT-UP ROOF
CUH	CABINET UNIT HEATER
CPT	CARPET
CIP	CAST IN PLACE
CLG	CEILING
CMTBD	CEMENT BOARD
CTR	CENTER
CT	CERAMIC TILE
CLR	CLEAR
COL	COLUMN
CONC	CONCRETE
CMU	CONCRETE MASONRY UNIT
CONST	CONSTRUCTION
CONT	CONTINUOUS
CTRL	CONTROL
CJ	CONTROL JOINT
COORD	COORDINATION
CG	CORNER GUARD
CTOP	COUNTERTOP
DEMO	DEMOLISH, DEMOLITION
DTL	DETAIL
DIA	DIAMETER
DIM	DIMENSION
DN	DOWN
DWG	DRAWING
DF	DRINKING FOUNTAIN
EA	EACH
EW	EACH WAY
EWC	ELECTRIC WATER COOLER
ELEC	ELECTRICAL
EP	ELECTRICAL PANEL
EL	ELEVATION
ELEV	ELEVATOR
EMER	EMERGENCY
ENG	ENGINEER
EQ	EQUAL
EQUIP	EQUIPMENT
EPDM	ETHYLENE PROPYLENE DIENE MONOMER
EF	EXHAUST FAN
EXIST	EXISTING
EJ	EXPANSION JOINT
EXT	EXTERIOR
EIFS	EXTERIOR INSULATION FINISH SYSTEM
FAB	FABRICATE
FOC	FACE OF CONCRETE
FOF	FACE OF FINISH
FOM	
FOS	
FT	FACE OF MASONRY
FRP	FACE OF STUDS
	FEET OR FOOT
FIN	FIBER REINFORCED PLASTIC PANEL
FTE	
FA	FINISH
FE	FINISHED FLOOR ELEVATION
FEC	FIRE ALARM
FEXT	FIRE EXTINGUISHER
FFLE	FIRE EXTINGUISHER CABINET
	FIXTURE
FLOR	FIXTURES, FURNISHINGS, EQUIPMENT
FLR	
FD	FLUORESCENT
FTG	FLOOR
FNDN	FLOOR DRAIN
FURN	FOOTING
	FOUNDATION
GALV	GALVANIZED
GA	GAGE
GC	GENERAL CONTRACTOR
GL	GLASS
GLAZ	GLAZING
GFI	GROUND FAULT INTERRUPTER
GYP	GYPSUM BOARD
HC	HOLLOW CORE
HDWR	HARDWARE
HVAC	HEATING, VENTILATION & AIR CONDITIONING
HT	HEIGHT
HM	HOLLOW METAL
HORZ	HORIZONTAL
HB	HOSE BIB
HR	HOUR
HYD	HYDRANT
IN	INCH(ES)
INCL	INCLUDE(D), INCLUDING
ID	IDENTIFICATION
INSL	INSULATE, INSULATION
INT	INTERIOR
INV	INVERT
JAN	JANITOR
JT	JOINT
JST	JOIST
LAM	LAMINATE
LVL	LAMINATED VENEER LUMBER
LAV	LAVATORY
L	LENGTH
LTG	LIGHTING
LF	LINEAL FEET
LOC	LOCATION, LOCATE
LB	POUND
LBS	POUNDS
MFR	MANUFACTURER
MAS	MASONRY
MO	MASONRY OPENING
MATL	MATERIAL
MAX	MAXIMUM
MECH	MECHANICAL
MEMB	MEMBRANE
MTL	METAL
MEZZ	MEZZANINE
MIN	MINIMUM
MISC	MISCELLANEOUS
MTD	MOUNTED
NOM	NOMINAL
NIC	NOT IN CONTRACT
NTS	NOT TO SCALE
N/A	NOT APPLICABLE
OC	ON CENTER
OPG	OPENING
OPP	OPPOSITE
OH	OVERHEAD
OSCI	OWNER SUPPLIED, CONTRACTOR INSTALLED
OSOI	OWNER SUPPLIED, OWNER INSTALLED
P	PAINT
PKG	PARKING
PART	PARTITION
PATT	PATTERN
PL	PLATE
PLAM	PLASTIC LAMINATE
PVC	POLYVINYL CHLORIDE
PT	PORCELAIN TILE
PIV	POST INDICATOR VALVE
PRV	POWER ROOF VENTILATOR
PC	PRECAST CONCRETE
PREFIN	PREFINISHED
PROP	PROPERTY
QTY	QUANTITY
QT	QUARRY TILE
R	RADIUS, RISER
RWL	RAIN WATER LEADER
REF	REFERENCE, REFRIGERATOR
RCP	REFLECTED CEILING PLAN
REINF	REINFORCED
REQD	REQUIRED
REV	REVERSE(D), REVISED
RD	ROOF DRAIN
RM	ROOM
RO	ROUGH OPENING
RB	RUBBER BASE
RT	RUBBER TILE
SAN	SANITARY
SCHD	SCHEDULE
SLNT	SEALANT
SV	SHEET VINYL
SHWR	SHOWER
SIM	SIMILAR
SC	SOLID CORE
SS	SOLID SURFACE
STC	SOUND TRANSMISSION CLASS
SPEC	SPECIFICATION(S)
SQ	SQUARE
SF	SQUARE FEET
SSTL	STAINLESS STEEL
STD	STANDARD
STL	STEEL
STR	STRUCTURAL
SUSP	SUSPENDED
TERR	TERRAZZO
T	TREAD
TOC	TOP OF CONCRETE
TOF	TOP OF FOOTING
TOM	TOP OF MASONRY
TOS	TOP OF STEEL
TOW	TOP OF WALL
T&G	TONGUE AND GROOVE
TEMP	TEMPERED, TEMPORARY
TOPO	TOPOGRAPHY
TYP	TYPICAL
UNO	UNLESS NOTED OTHERWISE
VERT	VERTICAL
VIF	VERIFY IN FIELD
VB	VINYL BASE
VCT	VINYL COMPOSITION TILE
WSCT	WAINSCOT
WC	WATER CLOSET
WH	WATER HEATER
WT	WEIGHT
WWF	WELDED WIRE FABRIC
WDW	WINDOW
W/	WITH
W/O	WITHOUT
WD	WOOD
WRB	WATER RESISTIVE BARRIER
&	AND
@	AT
CL	CENTER LINE
#	NUMBER, POUNDS
±	PLUS OR MINUS

DRAWING SYMBOLS:

- DETAIL NUMBER / SHEET WHERE SECTION IS LOCATED
- BUILDING SECTION NUMBER / SHEET WHERE SECTION IS LOCATED
- ELEMENT SECTION NUMBER / SHEET WHERE SECTION IS LOCATED
- A1 — BUILDING ELEVATION NUMBER / SHEET WHERE SECTION IS LOCATED
- A1 — ELEMENT ELEVATION NUMBER / SHEET WHERE SECTION IS LOCATED
- CLOUD AROUND REVISION / REVISION NUMBER
- Name / 101 — ROOM NAME / ROOM NUMBER
- 101A — ROOM WHERE DOOR IS LOCATED / DOOR LETTER
- WORK POINT, CONTROL POINT OR DATUM POINT
- 1 — GRID REFERENCE / GRID LINE / 0 — EXISTING GRID REFERENCE
- WALL TYPE
- WINDOW / WINDOW TAG
- CENTERLINE SYMBOL

Materials: EARTH OR FILL; POROUS FILL OR GRAVEL; CMU; CONCRETE; BITUMINOUS; BRICK; GYPSUM BOARD; STEEL STUD; STRUCTURAL WOOD; FINISHED WOOD; PLYWOOD; BATT INSULATION; RIGID INSULATION EXTRUDED; RIGID INSULATION EXPANDED; STEEL

GENERAL NOTES:

1. THE FOLLOWING GENERAL NOTES SHALL APPLY TO DRAWINGS AND GOVERN UNLESS OTHERWISE NOTED OR SPECIFIED.
2. THE CONSTRUCTION DOCUMENTS CONSIST OF DRAWINGS.
3. THE WORK DELINEATED IN THESE DRAWINGS SHALL CONFORM TO CODES, STANDARDS, AND REGULATIONS THAT HAVE JURISDICTION IN THE STATE OF WISCONSIN AND THE CITY OF MEQUON.
4. THE GENERAL CONTRACTOR AND ALL SUB CONTRACTORS SHALL COMPLY WITH THE APPROPRIATE MUNICIPAL AND REGULATORY AGENCIES AND SHALL VERIFY THAT ALL WORK IS IN COMPLIANCE WITH APPLICABLE LOCAL, STATE AND NATIONAL CODES AND REQUIREMENTS. THE GENERAL CONTRACTOR SHALL BE RESPONSIBLE FOR FILING FOR AND SECURING NECESSARY PERMITS AND APPROVALS FOR ALL TRADES.
5. REQUIREMENTS & REGULATIONS PERTAINING TO ACCESSIBILITY AND OSHA MUST BE INCORPORATED IN THE WORK EVEN THOUGH THEY MAY NOT BE LISTED INDIVIDUALLY AND SEPARATELY IN EITHER THE DRAWINGS OR THE SPECIFICATIONS.
6. FIRE RATING REQUIREMENTS SHALL BE PER WISCONSIN STATE CODE.
7. COMPARE FIELD CONDITIONS WITH ARCHITECTURAL DRAWINGS. ANY DISCREPANCIES SHALL BE DIRECTED TO THE ARCHITECT FOR CLARIFICATION PRIOR TO FABRICATION AND/OR CONSTRUCTION. SUBMIT ALL NECESSARY SHOP DRAWINGS PRIOR TO FABRICATION FOR APPROVAL BY ARCHITECT. NO INFORMATION OR DETAILS ON THESE SHEETS MAY BE USED ON OTHER PROJECTS WITHOUT THE PERMISSION OF AMERICAN DENTAL PARTNERS, OR THE ARCHITECT.
8. IN CASE OF AMBIGUITIES, DISCREPANCIES, OR IRREGULARITIES IN THE DRAWINGS, SPECIFICATIONS, MANUFACTURER'S INSTRUCTIONS, SITE CONDITIONS, OR APPLICABLE CODES AND STANDARDS; REQUEST CLARIFICATION FROM THE ARCHITECT BEFORE PROCEEDING. THE COST OF WORK DONE AS A RESULT OF PROCEEDING WITHOUT OBTAINING CLARIFICATION WILL BE BORNE SOLELY BY THE CONTRACTOR.
9. DO NOT SCALE DRAWINGS.
10. UNLESS OTHERWISE SHOWN OR NOTED, TYPICAL DETAILS SHALL BE USED WHERE APPLICABLE.
11. SAFETY MEASURES: THE CONTRACTOR SHALL BE SOLELY AND COMPLETELY RESPONSIBLE FOR THE CONDITIONS OF THE JOB SITE, INCLUDING SAFETY OF THE PERSONS AND PROPERTY AND FOR INDEPENDENT ENGINEERING REVIEWS OF THESE CONDITIONS. THE ARCHITECT'S OR ENGINEER'S JOB SITE REVIEW IS NOT INTENDED TO INCLUDE REVIEW OF THE ADEQUACY OF THE CONTRACTOR'S SAFETY MEASURES.
12. CONSTRUCTION OPERATIONS SHALL NOT BLOCK COMMON AREA HALLWAYS OR MEANS OF EGRESS. CONTRACTOR SHALL BE RESPONSIBLE FOR CONTINUING WITH THE LANDLORD ACCEPTABLE MEANS (AND ANY RESTRICTIONS IN TERMS OF TIMING) OF CONSTRUCTION ACCESS TO PERFORM THE WORK.
13. ALL WORK IS THE RESPONSIBILITY OF THE GENERAL CONTRACTOR UNLESS NOTED OTHERWISE.
14. WITHIN THESE PLANS, "OWNER" IMPLIES AMERICAN DENTAL PARTNERS.
15. THE TERM "CONTRACTOR" AND "G.C." REFER TO THE OWNER'S GENERAL CONTRACTOR AND THE GENERAL CONTRACTOR'S SUB-CONTRACTORS. IT IS THE GENERAL CONTRACTOR'S RESPONSIBILITY TO DETERMINE THE DIVISION OF WORK AMONG SUB-CONTRACTORS.
16. THE CONTRACTOR SHALL BE RESPONSIBLE FOR THE DISTRIBUTION OF DRAWINGS TO ALL TRADES UNDER HIS JURISDICTION.
17. ANY PENETRATION OF A RATED ASSEMBLY REQUIRES AN APPROVED FIRESTOP SYSTEM.
18. THE WORK SHALL INCLUDE INSTALLATION OF OWNER-PROVIDED EQUIPMENT - SEE ADDITIONAL INFORMATION PROVIDED BY OWNER'S DENTAL SUPPLIER.
19. ALL SUBSTITUTIONS MUST BE APPROVED IN WRITING BY THE ARCHITECT/DESIGNER PRIOR TO ORDER PLACEMENT.

DRAWING SCHEDULE

A1	TITLE SHEET, KEY PLAN, GENERAL NOTES
A2	CODE PLAN
A3	FLOOR PLAN AND DETAILS
A4	DOOR & FINISH SCHEDULES, DETAILS
A5	FURNITURE/ EQUIPMENT/ ELECTRICAL PLAN
A6	REFLECTED CEILING PLAN AND SECTIONS
A7	INTERIOR ELEVATIONS AND DETAILS
A8	INTERIOR ELEVATIONS AND DETAILS
A9	INTERIOR ELEVATIONS
A10	INTERIOR FINISH PLAN AND DETAILS
E0	ELECTRICAL TITLE SHEET
E1	ELECTRICAL LIGHTING PLAN
E2	ELECTRICAL POWER PLAN
E3	ELECTRICAL SCHEDULES & DETAILS
E4	ELECTRICAL SPECIFICATIONS
M0	MECHANICAL TITLE SHEET
M1	HVAC PLAN
P2	PLUMBING PLAN
M3	DENTAL PIPING PLAN
M4	MECHANICAL DETAILS AND SCHEDULES
M5	PLUMBING RISER DIAGRAMS
P5	MECHANICAL SPECIFICATIONS

WHEN DRAWINGS VARY FROM ARCHITECTURAL AND ENGINEERING TO DENTAL EQUIPMENT SUPPLIER, ARCHITECTURAL AND ENGINEERING DRAWINGS SHALL TAKE PRESIDENT. PLEASE REPORT DISCREPANCIES TO ARCHITECT PRIOR TO EXECUTION OF WORK. IF ARCHITECT IS NOT CONSULTED, THE COST OF REMEDIAL WORK WILL BE SOLELY BORNE BY CONTRACTOR.

DENTAL EQUIPMENT DRAWINGS ISSUED SEPARATELY

FURNITURE DRAWINGS ISSUED SEPARATELY

PROJECT TEAM:

ADP LOCAL CONTACTS:
DANIEL KINNEY
DIRECTOR, REAL ESTATE DEVELOPMENT & MANAGEMENT
DKINNEY@AMDPI.COM
612-791-9174

ENZO TRUBIANO
PROJECT MANAGER, DEVELOPMENT
ETRUBIANO@AMDPI.COM
763-469-7103

TENANT'S NATIONAL ARCHITECT:
KRECH, O'BRIEN, MUELLER & ASSOCIATES
STEVE SAREA - PROJECT ARCHITECT
SSARAE@KOMAINC.COM; 651-789-4127
CINDY NAGEL - PROJECT MANAGER
CNAGEL@KOMAINC.COM; 651-789-4124
LAURA BAUER - PROJECT DESIGNER
LBAUER@KOMAINC.COM; 651-789-4128

DENTAL EQUIPMENT SUPPLIER:
PATTERSON DENTAL SUPPLY
JOE TECHAR
651-682-3732
402-216-5952

MOHAWK NATIONAL ACCOUNT:
KATY COWMAN-HUNTRESS
617-971-7734
KATY-COWMAN-HUNTRESS@MOHAWKIND.COM

MUSIC SYSTEMS:
DMX MUSIC
CARL GEBHARDT
CARL.GEBHARDT@DMX.COM
612-919-6727

TELECOM/DATA SYSTEMS SUPPORT:
AMERICAN DENTAL PARTNERS
DAVE BERNARD - ADP TELECOM CONTACT
DAVE_BERNARD@AMDPI.COM
651-286-8135

PRACTICE MANAGEMENT SYSTEMS:
AMERICAN DENTAL PARTNERS
ROY RISCH - DIGITAL & EDR
RRISCH@AMDPI.COM
651-286-8102

COMPUTER EQUIPMENT INSTALLER:
PELLIN TECHNOLOGY MANAGEMENT
GREG PELLIN
GREG@PELLINTECH.COM
763-208-9810

SIGNAGE:
ARCHETYPE
GARY STEHLER
GARYS@ARCHETYPESIGN.COM
651-289-9144

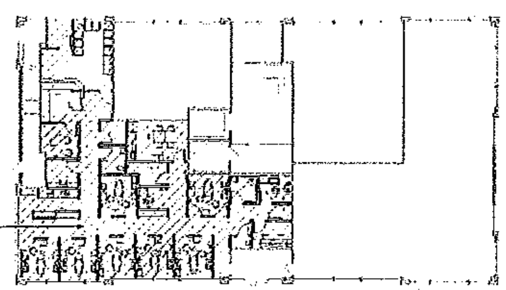

NORTH ① OVERALL PLAN
1/16" = 1'-0"

VICINITY MAP:

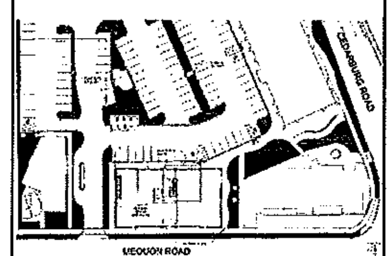

KRECH, O'BRIEN, MUELLER & ASSOCIATES, INC.
Architecture Structural Engineering Interior Design
6115 Cahill Avenue
Inver Grove Heights
Minnesota 55076
651.451.4605
fax 651.451.0917
kome@komainc.com

TITLE SHEET, KEY PLAN, GENERAL NOTES

FORWARD DENTAL, MEQUON
5970 WEST MEQUON RD
MEQUON, WI

PROJECT:	14217
DRAWN BY:	LLB
CHECKED BY:	MRD
DATE:	12/16/14
REVISIONS:	
1	3/8/15

A1

EXHIBIT A: Approved Plans (select sheets only)

Attachment: Packet (2071 : Mallary & Zimmerman for Forward Dental)

FLOOR PLAN NOTES:

1. EXISTING WALLS TO REMAIN ARE SHOWN AS SHADED, EXISTING DOORS ARE SHOWN AT A 45 DEGREE ANGLE.
2. NEW WALLS ARE DIMENSIONED FROM FINISHED FACE TO FINISHED FACE AND ARE CLEAR UNLESS NOTED OTHERWISE.
3. PROVIDE SOLID BLOCKING AT ALL WALL MOUNTED FIXTURES, FURNITURE, CASEWORK & EQUIPMENT.
4. INTERIOR SIGNAGE & ARTWORK PROVIDED BY OWNER, INSTALLED BY CONTRACTOR.
5. SEE EQUIPMENT PLAN (SHEET A5) FOR LOCATIONS OF EQUIPMENT AND WALL PENETRATIONS. GENERAL CONTRACTOR SHALL COORDINATE WITH THE DENTAL EQUIPMENT SUPPLIER THE REQUIREMENTS FOR PLUMBING, ELECTRICAL & LOW VOLTAGE CONNECTIONS, BLOCKING FOR MOUNTING AND FRAMING. REQUIREMENTS FOR THE INSTALLATION OF DENTAL EQUIPMENT.
6. SEE REFLECTED CEILING PLAN FOR CEILING HEIGHTS.
7. PROVIDE & INSTALL WINDOW TREATMENTS AND FILM AT ALL EXTERIOR WINDOWS - SEE EXTERIOR FINISH SCHEDULE.
8. PROVIDE & INSTALL SOLID SURFACE WINDOW SILLS ON ALL EXTERIOR SILLS - SEE A/A3

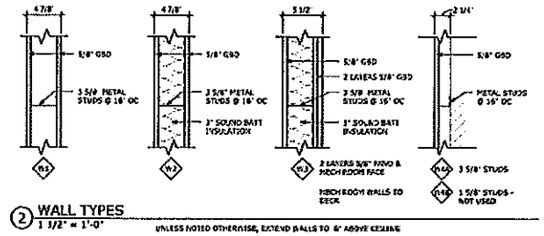

② WALL TYPES
1 1/2" = 1'-0"

UNLESS NOTED OTHERWISE, EXTEND WALLS TO 6" ABOVE CEILING

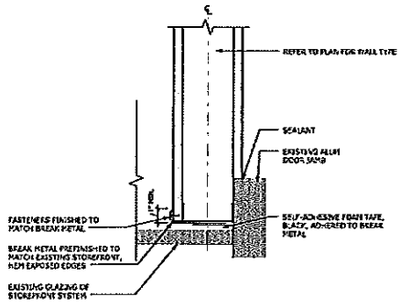

③ WALL / GLAZING CONNECTION
3" = 1'-0"

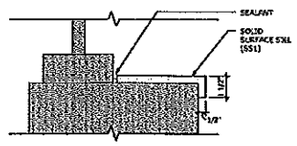

④ SILL DETAIL
3" = 1'-0"

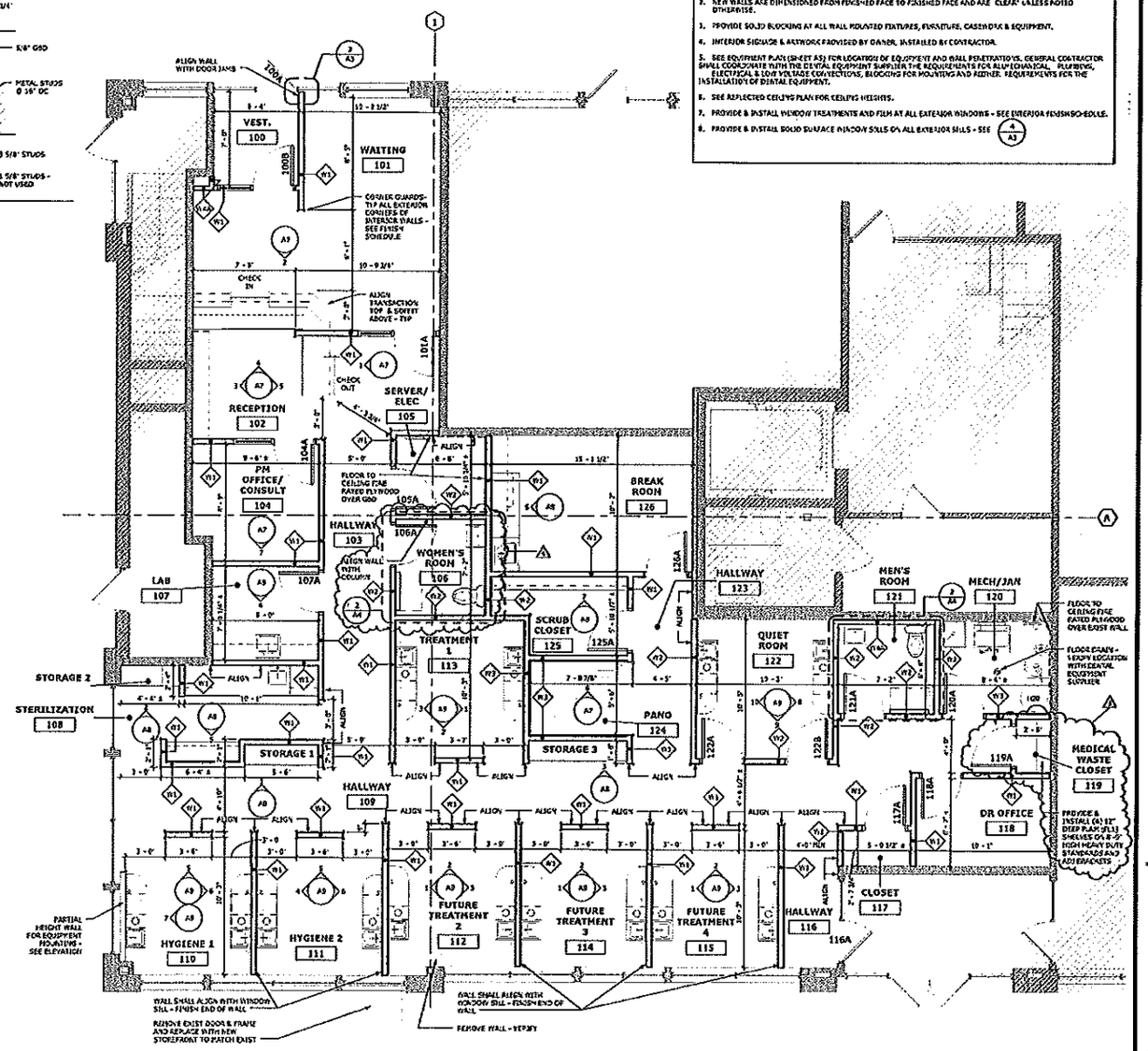

① FLOOR PLAN
1/4" = 1'-0"

KRECH, O'BRIEN, MUELLER & ASSOCIATES, INC.
Architecture Structural Engineering Interior Design
6115 Cahill Avenue
Inver Grove Heights
Minnesota 55076
651.451.4605
fax 651.451.0917
kmainc@kmainc.com

FLOOR PLAN AND DETAILS

FORWARD DENTAL, MEQUON
5970 WEST MEQUON RD
MEQUON, WI

PROJECT:	14217
DRAWN BY:	LLB
CHECKED BY:	MRD
DATE:	12/16/14

REVISIONS:
3 2/27/15
4 3/12/15

A3

INTERIOR FINISH SCHEDULE

LEGEND CODE	ITEM	MANUFACTURER	MODEL	LOCATION	COMMENTS
ACT1	CEILING TILE	USG	MARS CLIMAPLUS OR EQ; BEVELED TEGULAR 2'x2' WHITE TILE, 15/16" WHITE GRID	HALLWAYS AND RECEPTION	
ACT2	CEILING TILE	USG	MARS CLIMAPLUS OR EQ; BEVELED TEGULAR 2'x4' WHITE TILE, 15/16" WHITE GRID	PATIENT ROOMS, ETC.	
CG1	CORNER GUARDS	ACROGUARD	C-8 CREAM #C815	USE WITH P1 ON ALL OUTSIDE CORNERS	8'-0" HIGH - START AT FLOOR, PRIOR TO BASE INSTALLATION (SEE 3/A10)
CG2	CORNER GUARDS	ACROGUARD	C-10 SAND #C815	USE WITH P2 ON ALL OUTSIDE CORNERS	8'-0" HIGH - START AT FLOOR, PRIOR TO BASE INSTALLATION (SEE 3/A10)
CG3	CORNER GUARDS	ACROGUARD	CLEAR #C815	USE WITH P3 ON ALL OUTSIDE CORNERS	8'-0" HIGH - GC SHALL PREFABRICATE AND TOUCH UP FRAME PRIOR TO FINAL INSTALLATION OF CORNER GUARDS
CP1	CARPET	MOHAWK	ACHIEVE IT 87301, INTROSPECTIVE BLUE 7545	SEE PLAN	ORDER DIRECTLY THROUGH ERTY INTERIORS OF MOHAWK AT 817-921-9234, 24424 TILE - QUARTER TUFT
CP2	CARPET (WALK OFF)	LEES	STEP UP 534 SUNSCAPE 18 X 16" TILE	VESTIBULE	1/4 TURN INSTALLATION
CT1	CERAMIC TILE	CALTILE	ESTA VILLA 12"x12" EV99 TERRACE BEIGE	RESTROOMS - FLOOR AND BOARDER - SEE ELEVATION	BULLNOSE - P4109 3"x12" BULLNOSE; BASE - 3"x12" STRAIGHT TILE BASE; GROUT - POLYBLEND 183 CHA/GAUR EPOXY
CT2	CERAMIC TILE	CALTILE	ESTA VILLA 12"x12" EV98 COTTAGE BROWN	RESTROOMS - 48" HIGH WAINSCOT - SEE ELEVATION	USE A-3401 4-1/4"x4-1/4" COVE BASE, S-4449 BULLNOSE AND OTHER TRIM PIECES AS REQUIRED. GROUT - NATURAL GREY
FS1	VINYL TRIM	3M	SCOTCHAL #314 DUSTED CRYSTAL	DOORS AS INDICATED	
FRP	FIBERGLASS REINFORCED PLASTIC PANEL	CRANE OR EQUAL	WHITE TEXTURED	JANITOR SINK	
P1	PAINT	SHERWIN WILLIAMS	GOOD, SASSY SW6648 (OFF WHITE)	SEE FINISH PLAN	
P2	PAINT	SHERWIN WILLIAMS	UNIVERSAL KHAKI SW6153 (TAN)	SEE FINISH PLAN	
P3	PAINT	SHERWIN WILLIAMS	FOXY DAY SW6335 (BLUE)	ACCENT WALLS IN WAITING AND RECEPTION	
PL1	PLASTIC LAMINATE	WILSONART	# 4841-60 DESERT ZENITH	CABINETS AND COUNTERTOPS	SEE PLAN & ELEVATIONS
PL2	PLASTIC LAMINATE	WILSONART	#7939-60 FUSION MAPLE	SUPPLY CABINETS AND RECEPTION DESK	SEE PLAN & ELEVATIONS
PL3	PLASTIC LAMINATE	WILSONART	#7939-60 WINDSOR MAHOGANY	RECEPTION DESK ACCENT	SEE PLAN & ELEVATIONS - WILSONART HORIZONS 35 REGIONAL WAREHOUSE EVERYDAY MAINTAINS STOCK.
SS1	SOLID SURFACE	CORIAN	MARZIPAN MIRAGE 9139MG	RECEPTION TRANSACTION TOP & WINDOW SILLS	
SS2	SOLID SURFACE	WILSONART GEMSTONE	BAHA MELANGE 9230HL E35	STERILIZATION COUNTER TOP	
SV	SHEET VINYL	GERBERT LIMITED	POLYFLOR - FOREST FA3310 RICH CHERRY	SEE FINISH PLAN - SEE INTERIOR FINISH PLAN FOR GRAIN DIRECTION	HEAT WELD SEAMS (ADD TO MATCH BACKGROUND) AND ADHESIVE PER MANUFACTURER'S RECOMMENDATIONS
TS	TRANSITION STRIP	JOHNSONITE	CTA-XX-NT CLAY # 09 1/4" TO .250 REDUCER	CARPET TO SHEET VINYL TRANSITIONS	INSTALL PER MANUFACTURER'S INSTRUCTIONS
VB1	VINYL BASE	JOHNSONITE	CLAY #29, 4" HIGH COVE BASE & 4" HIGH STRAIGHT BASE	USE WITH CARPET, VINYL AND EPOXY FLOORING	USE COVE WITH SHEET VINYL AND EPOXY, USE STRAIGHT WITH CARPET
VCT	VINYL COMPOSITION TILE	ARMSTRONG	ESSENTIALS # 843 COOL WHITE		12" X 12"
WT1	WINDOW TREATMENTS	HUNTER DOUGLAS CONTRACT	QUESTE PR HONEYCOMB SHADES - BEACH SHELLS #907	ALL EXTERIOR WINDOWS UNLESS NOTED OTHERWISE	TOP DOWN IN WAITING ROOM, ALL OTHERS TOP DOWN BOTTOM UP
WT2	EXTERIOR WINDOW FILM	3M	SUN CONTROL WINDOW FILM WITH A MIN. .3 COEFFICIENT - VERIFY WITH OWNER, LANDLORD AND ARCHITECT	ALL EXTERIOR WINDOWS UNLESS NOTED OTHERWISE	

DOOR SCHEDULE

DOOR NUMBER	ROOM NAME	DOOR TYPE	WIDTH	HEIGHT	GLASS	DOOR MATERIAL	DOOR FINISH	FRAME TYPE	FRAME MATERIAL	FRAME FINISH	REMARKS
100A	VESTIBULE	EXIST	3'-0 1/8"	10'-4"		EXIST	EXIST	EXIST	EXIST	EXIST	NEW ENTRANCE LOCK & HARDWARE TO MATCH CLINIC
100B	VESTIBULE	C	3'-0"	7'-0	1/4" TEMP	ALUM	MATCH EXIST	2	ALUM	MATCH EXIST	INTERIOR PUSH LEVER/EXTERIOR PULL, CLOSER, NO VINYL FILM ON SIDELIGHT
101A	WAITING	B	3'-0"	7'-0	1/4" TEMP	WOOD	STAIN	2	HM	PAINT	PASSAGE SET, CLOSER
104A	PM OFFICE	B	3'-0"	7'-0"	1/4" TEMP	WOOD	STAIN	3	HM	PAINT	PASSAGE SET, CLOSER
105A	SERVER/ELEC	A	3'-0"	7'-0		WOOD	STAIN	1	HM	PAINT	CLASSROOM LOCK, CLOSER
106A	WOMEN'S ROOM	A	3'-0"	7'-0		WOOD	STAIN	1	HM	PAINT	PRIVACY LOCK, CLOSER
107A	LAB	A	3'-0"	7'-0		WOOD	STAIN	1	HM	PAINT	PASSAGE SET, CLOSER
116A	HALL	EXIST	3'-0"	7'-2		EXIST	STAIN	EXIST	EXIST	PAINT	NEW ENTRANCE LOCK & HARDWARE TO MATCH CLINIC
117A	CLOSET	A	3'-0"	7'-0		WOOD	STAIN	1	HM	PAINT	CLASSROOM LOCK
118A	DR OFFICE	A	3'-0"	7'-0		WOOD	STAIN	1	HM	PAINT	PASSAGE SET
119A	MEDICAL WASTE CLOSET	A	3'-0"	7'-0		WOOD	STAIN	1	HM	PAINT	CLASSROOM LOCK, CLOSER
120A	MEDIAN	A	3'-0"	7'-0		WOOD	STAIN	1	HM	PAINT	CLASSROOM LOCK, CLOSER & GASKET
121A	MEN'S ROOM	A	3'-0"	7'-0		WOOD	STAIN	1	HM	PAINT	PRIVACY LOCK, CLOSER
122A	QUIET ROOM	A	3'-0"	7'-0		WOOD	STAIN	1	HM	PAINT	PASSAGE SET & GASKET
123A	QUIET ROOM	A	3'-0"	7'-0		WOOD	STAIN	1	HM	PAINT	PASSAGE SET & GASKET
125A	SCALD CLOSET	A	3'-0"	7'-0		WOOD	STAIN	1	HM	PAINT	PRIVACY LOCK & CLOSER
126A	BREAK ROOM	A	3'-0"	7'-0		WOOD	STAIN	1	HM	PAINT	PASSAGE SET

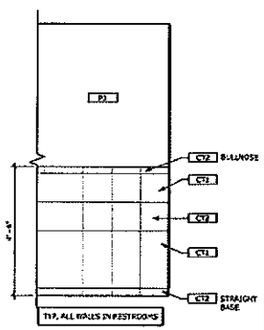

1 TYP. RESTROOM ELEVATION
1/2" = 1'-0"

ACCESSORIES:

1. BOBRICK CLASSIC SERIES SURFACE-MOUNTED PAPER TOWEL DISPENSER B-2620 OR EQ.
2. BOBRICK 1 1/2" DIA. STAINLESS STEEL GRAB BARS WITH SNAP FLANGE B-6806 SERIES OR EQ.
3. BOBRICK 24" x 36" MIRROR WITH STAINLESS STEEL CHANNEL FRAME B-165 SERIES OR EQ.
4. BOBRICK RECESSED DUAL-ROLL TOILET TISSUE DISPENSER B-697 OR EQ.
5. CLOTHES HOOKS SHALL BE BOBRICK B-676 OR EQ.
6. DIAPER CHANGING STATION - SEE TYP RESTROOM PLAN - COLOR ACO.

NOTES:

1. THE CLEAR FLOOR SPACE FOR FIXTURES MAY OVERLAP.
2. SEE 3/A4 FOR TOILET ACCESSORY HEIGHTS.
3. SEE 1/A4 FOR TYP. ELEVATION.
4. TOILET VALVE NIPPLE TO BE CHROME.

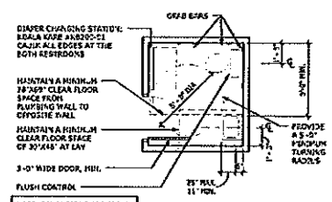

NOTE: DIMENSIONS ARE FROM FINISHED FACE OF WALLS

2 TYP. RESTROOM PLAN
1/4" = 1'-0"

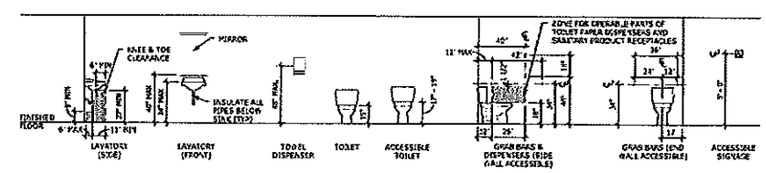

NOTE: PROVIDE ADDITIONAL ACCESSORIES & SIGNAGE AS REQUIRED TO MEET CODE.

3 TOILET ACCESSORY HEIGHTS
1/4" = 1'-0"

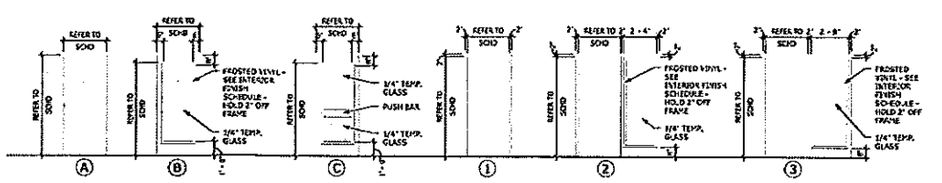

DOOR AND FRAME TYPES
1/4" = 1'-0"

DOOR, FRAME, & HARDWARE NOTES:

1. WOOD DOORS SHALL BE MAPLE STAINED TO MATCH PLASTIC LAMINATE "PL2".
2. VERIFY RATING REQUIREMENTS WITH OWNER.
3. DOORS SHALL HAVE ADA COMPLIANT LEVER HANDLES WITH SATIN CHROME FINISH - KASER 3450 SERIES "ARCHER" OR EQUAL.
4. PROVIDE & INSTALL DOOR HARDWARE AS REQ'D: HINGES, HEAVY DUTY COMMERCIAL GRADE LOCKS, CLOSERS, WALL STOPS & GASKETS - SCHLAGE OR EQUAL.
5. HARDWARE FINISH SHALL BE SATIN ALUMINUM.
6. PAINT FRAME TO MATCH ADJACENT WALL SURFACE PAINT (GENERALLY P3).
7. SIDELIGHT GLASS STOPS SHALL BE ON THE HALLWAY SIDES.
8. PROVIDE WALL OR FLOOR DOOR STOPS AT ALL DOOR LOCATIONS.

KRECH, O'BRIEN, MUELLER & ASSOCIATES, INC
Architecture Structural Engineering Interior Design
6115 Cahill Avenue
Inver Grove Heights
Minnesota 55076
651.451.4605
fax 651.451.0917
kmaarchitects.com

THE DESIGNS AND ARRANGEMENTS SHOWN HEREON ARE THE PROPERTY OF KRECH, O'BRIEN, MUELLER & ASSOCIATES, INC. AS WITH PREVIOUSLY, NO PART OF THIS DOCUMENT MAY BE REPRODUCED IN ANY FORM OR BY ANY MEANS WITHOUT THE WRITTEN PERMISSION OF KRECH, O'BRIEN, MUELLER & ASSOCIATES, INC.

DATE _____ FILE NO. _____

DOOR & FINISH SCHEDULES, DETAILS

FORWARD DENTAL, MEQUON
5970 WEST MEQUON RD
MEQUON, WI

PROJECT:	14217
DRAWN BY:	MHH
CHECKED BY:	MRD
DATE:	12/16/14
REVISIONS:	

A4

Attachment: Packet (2071 : Mallary & Zimmerman for Forward Dental)

Attachment: Packet (2071 : Mallary & Zimmerman for Forward Dental)

EXTENT OF FINISH PLAN NOTES:

1. FINISHES SHALL BE INSTALLED PER MANUFACTURER'S RECOMMENDATIONS.
2. ALL CARPET EDGES AT SEAMS SHALL BE SEALED TO PREVENT UNRAVELING.
3. INSTALL APPROPRIATE TRANSITION STRIPS AND THRESHOLDS AT FLOORING MATERIAL TRANSITIONS. SUBMIT SPECIFICATION TO ARCHITECT FOR APPROVAL.
4. SEE REFLECTED CEILING PLAN FOR CEILING HEIGHTS.
5. WHERE WALL FINISH IS NOT SPECIFIED, USE P2.
6. PROVIDE AND INSTALL 1 COAT PRIMER AND 2-3 COATS FINISH PAINT FOR FULL COVERAGE.
7. PAINT FINISH SHALL BE EGGSHELL ON WALLS, FLAT ON SOFFITS & BULKHEADS & SEMI GLOSS ON CEILINGS, M.P., DOORS & DOOR FRAMES.
8. DEVICE COVERS SHALL BE IVORY.
9. PAINT GRILLES TO MATCH WALL COLOR.

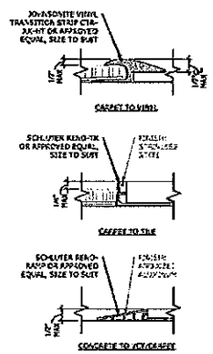

2 FLOORING TRANSITION DETAIL
12" = 1'-0"

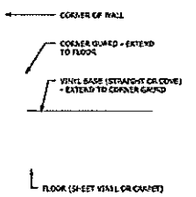

3 CORNER GUARD DETAIL
3" = 1'-0"

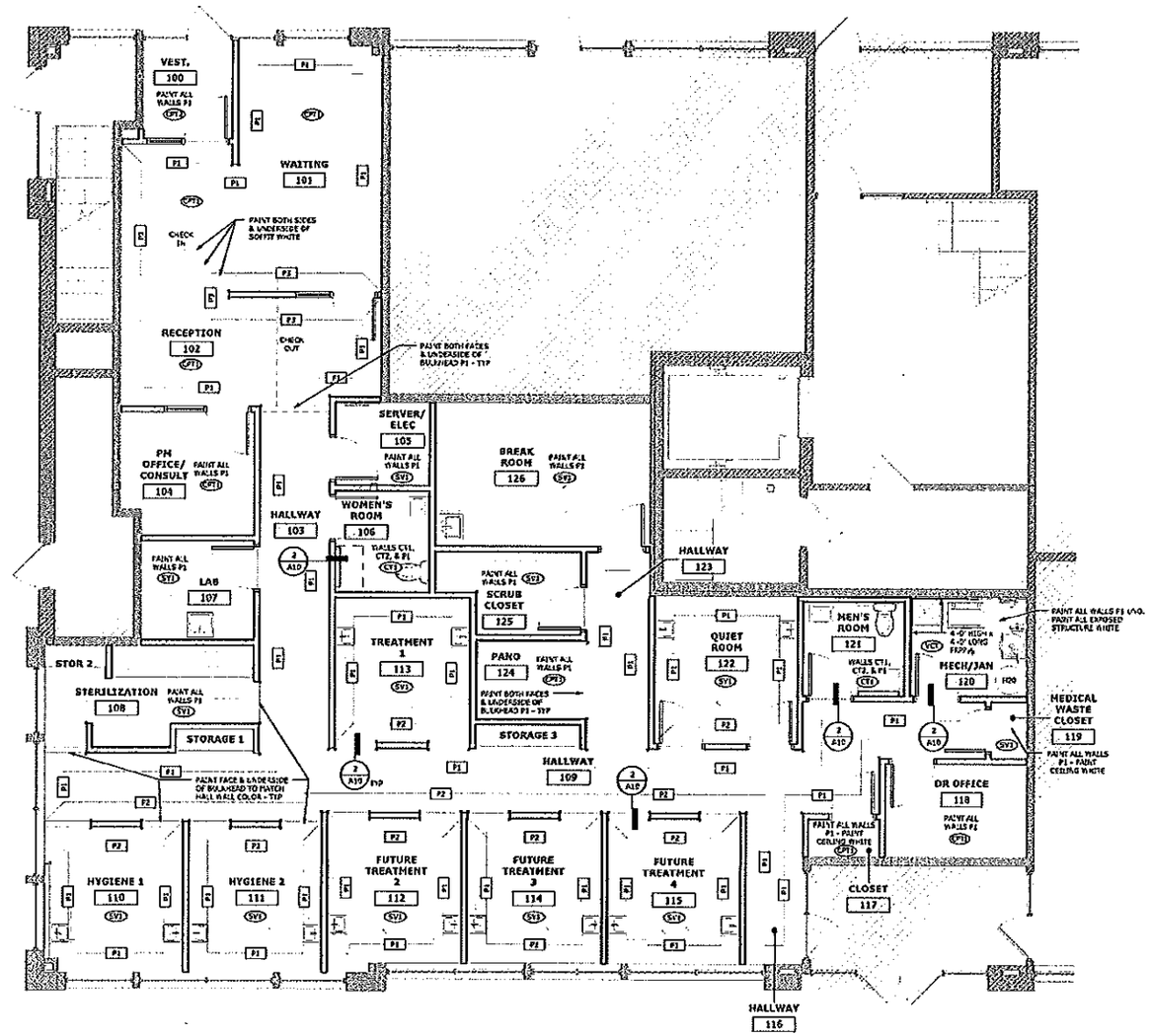

1 WALL AND FLOOR FINISH PLAN
1/4" = 1'-0"

KRECH, O'BRIEN, MUELLER & ASSOCIATES, INC.
Architecture Structural Engineering Interior Design
6115 Cahill Avenue
Inver Grove Heights
Minnesota 55076
651.451.4605
fax 651.451.0917

INTERIOR FINISH PLAN AND DETAILS

FORWARD DENTAL, MEQUON
5970 WEST MEQUON RD
MEQUON, WI

PROJECT:	14217
DRAWN BY:	ELB
CHECKED BY:	MRD
DATE:	12/16/14
REVISIONS:	

A10

COMMON COUNCIL
OF THE
CITY OF MEQUON

ORDINANCE 2016-1479

An Ordinance Amending Chapter 58 of the City of Mequon Zoning Code, Regarding Window Area Obstructions in the Town Center and Arrival Corridor Zoning Districts

THE COMMON COUNCIL OF THE CITY OF MEQUON, OZAUKEE COUNTY, STATE OF WISCONSIN, ORDAINS AS FOLLOWS:

SECTION I:

Chapter 58, Zoning Code, of the Mequon Code of Ordinances are amended in the forms attached to this Ordinance, having been placed on file and open to public inspection in the office of the City Clerk of the City of Mequon at City Hall, 11133 North Cedarburg Road, Mequon, Wisconsin, in accordance with the procedures provided in Sections 66.0103 and 62.11(4)(a), Wis. Stats.

SECTION II:

All ordinances in conflict or inconsistent with this ordinance, in whole or in part, are repealed to the extent necessary to give this ordinance full force and effect.

SECTION III:

This ordinance shall be in full force and effect upon its passage and on the day after its publication.

Approved by: Dan Abendroth, Mayor

Date Approved: November 9, 2016

I certify that the foregoing Ordinance was adopted by the Common Council of the City of Mequon, Wisconsin, at a meeting held on November 9, 2016.

Caroline Fochs, City Clerk

Published: November 29, 2016

Attachment: Packet (2071 : Mallary & Zimmerman for Forward Dental)

Town Center

Town Center Zoning District: Section 58-301(l)(2)
Required window areas have the following purpose:

1. Contribute to the overall building composition
2. Enhance curb appeal and neighborhood value
3. Promote natural surveillance
4. Reduce energy consumption through the use of passive solar design
5. Display business products and services

Required window areas shall remain transparent with windows that allow two-way views into first floor occupant spaces, working areas, lobbies or pedestrian entrances, as applicable, except for the following permitted window area obstructions.

a. Window Area Obstructions. The following are permitted window area obstructions:

   1. Permitted Window Signage. Window signage is a permitted window area obstruction and shall comply with the following design standards:

      - Window signage shall be limited to 33% of each individual window area in the occupant's space.
      - Window signage shall not obstruct more than 30% of the window area measured between four (4) and (8) feet in height above the adjacent walkway level.
      - The front of the signage shall face the adjacent walkway.
      - Window signage shall be consistent with and relate to the products, services and brand elements of the occupant's use.

   2. Window Shelving. Window shelving located within four feet from the surface of the window is a permitted window area obstruction and shall comply with the following design standards:

      - Window shelving units shall be limited to 33% of the use's aggregate window area as defined in section 58-301(l)(2).
      - Window shelving units and product display shall not obstruct more than 30% of the window area measured between four (4) and (8) feet in height above the adjacent walkway level.
      - Window shelving units shall be set back 8" from the surface of the window.
      - The front of the shelving units and products displayed on shelving shall face the adjacent walkway.

Attachment: Packet (2071 : Mallary & Zimmerman for Forward Dental)

3. Enclosed Window Displays. Enclosed window displays have a full background and sides that completely separate the interior of the store from the display window. Enclosed window displays are permitted window area obstructions and shall comply with the following design standards:

   - Enclosed window displays shall be limited to 33% of the use's aggregate window area as defined in section 58-301(l)(2).
   - Only one (1) window pane per use shall be permitted as an enclosed window display.
   - Enclosed window displays shall be internally lit during evening business operating hours. Lighting is subject to the approval of the Department of Community Development.
   - Enclosed window displays shall have a minimum depth of three (3) feet.
   - Enclosed window displays shall be designed to relate to the scale of the window area and be consistent with and relate to the products, services and the brand elements of the associated occupant's use.
   - Displays shall change:
     - At a minimum, seasonally, unless approved by the Department of Community Development.
     - When products or display elements begin to fade or deteriorate in appearance.
   - Enclosed window displays shall be maintained in a clean, clutter free manner.
   - All mechanical equipment shall be disguised from public view.

b. Prohibited Window Area Obstructions. The following window area obstructions and obstructions similar to the following as determined by the Planning Commission, are prohibited:

   - Protective grilles
   - Window bars
   - Metal or similar material roll down screens or gates Reflective, dark tinted or frosted glass
   - Materials not otherwise permitted in this section that block visibility through windows into first floor occupant spaces along streets, walkways, plazas or parking areas.
   - Backs of signs or backs of shelving units

c. Exceptions to Window Area Obstructions. The Planning Commission may approve window area obstructions of types and amounts not specified in section 58-301(1)(2)a. for first floor windows for the following uses upon finding that strict compliance is

Attachment: Packet (2071 : Mallary & Zimmerman for Forward Dental)

impractical under the circumstances and the proposal includes amenities that address the adverse effects, if any, of the exception:

- Medical and institutional uses
- Specialty food retailers
- Theatres
- Parking garages
- Others as approved by Planning Commission

Attachment: Packet (2071 : Mallary & Zimmerman for Forward Dental)

Arrival Corridor

Town Center Zoning District: Section 58-302(l)(2)
Required window areas have the following purpose:

1. Contribute to the overall building composition
2. Enhance curb appeal and neighborhood value
3. Promote natural surveillance
4. Reduce energy consumption through the use of passive solar design
5. Display business products and services

Required window areas shall remain transparent with windows that allow two-way views into first floor occupant spaces, working areas, lobbies or pedestrian entrances, as applicable, except for the following permitted window area obstructions.

a. Window Area Obstructions. The following are permitted window area obstructions:

   1. Permitted Window Signage. Window signage is a permitted window area obstruction and shall comply with the following design standards:

      - Window signage shall be limited to 33% of each individual window area in the occupant's space.
      - Window signage shall not obstruct more than 30% of the window area measured between four (4) and (8) feet in height above the adjacent walkway level.
      - The front of the signage shall face the adjacent walkway.
      - Window signage shall be consistent with and relate to the products, services and brand elements of the occupant's use.

   2. Window Shelving. Window shelving located within four feet from the surface of the window is a permitted window area obstruction and shall comply with the following design standards:

      - Window shelving units shall be limited to 33% of the use's aggregate window area as defined in section 58-302(l)(2).
      - Window shelving units and product display shall not obstruct more than 30% of the window area measured between four (4) and (8) feet in height above the adjacent walkway level.
      - Window shelving units shall be set back 8" from the surface of the window.
      - The front of the shelving units and products displayed on shelving shall face the adjacent walkway.

Attachment: Packet (2071 : Mallary & Zimmerman for Forward Dental)

3. Enclosed Window Displays. Enclosed window displays have a full background and sides that completely separate the interior of the store from the display window. Enclosed window displays are permitted window area obstructions and shall comply with the following design standards:

   - Enclosed window displays shall be limited to 33% of the use's aggregate window area as defined in section 58-302(l)(2).
   - Only one (1) window pane per use shall be permitted as an enclosed window display.
   - Enclosed window displays shall be internally lit during evening business operating hours. Lighting is subject to the approval of the Department of Community Development.
   - Enclosed window displays shall have a minimum depth of three (3) feet.
   - Enclosed window displays shall be designed to relate to the scale of the window area and be consistent with and relate to the products, services and the brand elements of the associated occupant's use.
   - Displays shall change:
     - At a minimum, seasonally, unless approved by the Department of Community Development.
     - When products or display elements begin to fade or deteriorate in appearance.
   - Enclosed window displays shall be maintained in a clean, clutter free manner.
   - All mechanical equipment shall be disguised from public view.

b. Prohibited Window Area Obstructions. The following window area obstructions and obstructions similar to the following as determined by the Planning Commission, are prohibited:

   - Protective grilles
   - Window bars
   - Metal or similar material roll down screens or gates Reflective, dark tinted or frosted glass
   - Materials not otherwise permitted in this section that block visibility through windows into first floor occupant spaces along streets, walkways, plazas or parking areas.
   - Backs of signs or backs of shelving units

c. Exceptions to Window Area Obstructions. The Planning Commission may approve window area obstructions of types and amounts not specified in section 58-302(1)(2)a. for first floor windows for the following uses upon finding that strict compliance is

Attachment: Packet (2071 : Mallary & Zimmerman for Forward Dental)

impractical under the circumstances and the proposal includes amenities that address the adverse effects, if any, of the exception:

- Medical and institutional uses
- Specialty food retailers
- Theatres
- Parking garages
- Others as approved by Planning Commission

Attachment: Packet (2071 : Mallary & Zimmerman for Forward Dental)

City of Mequon

11333 N. Cedarburg Rd
Mequon, WI 53092-1930
Phone: 262-236-2902
Fax: 262-242-9655

www.ci.mequon.wi.us

Office of Community Development

TO: **Planning Commission**

FROM: **JAC ZADER, ASSISTANT DIRECTOR COMMUNITY DEVELOPMENT**

DATE: **January 11, 2017**

SUBJECT: **Dermond Property Investments. The applicant is seeking specimen tree removal approval to remove 13 trees to allow for a 3-story, 33 unit multiple family residential development located at 11130 N. Buntrock Avenue.**

Applicant:	Dermond Property Investments
Status of Applicant:	Owner
Requested:	Specimen Tree Removal
Existing Use:	Vacant Land
Existing Zoning:	TC (Town Center) PUD (Planned Unit Development)
Existing Land Use Plan:	Town Center
Lot size:	1 Acre
Location:	11130 N. Buntrock Avenue
Tax Key:	#4

Background:
The applicant is requesting approval for the removal of 13 specimen trees at 11130 N Buntrock. The applicant appeared in front of the Planning Commission for a rezoning recommendation (PUD) in October of 2015 and received Common Council approval in November of 2015 (Ordinance #2015-1459). The Planning Commission approved the building and site plan on December 7, 2015 which included the removal of two specimen trees. The applicant was in the process of digging for the footing and foundation when it was discovered that the specimen trees were not originally marked correctly and will be impacted by the construction. All approvals for the project have been granted including the development agreement (signed and executed) and TIF incentive which was based on a project value of eight million dollars.

Specimen Trees & Site Planning:
As the Commissioners may recall, the original site plan showed the building on the south end of the site with the driveway to the north. The proposed driveway would have eliminated all the trees along the north property line. The applicant then shifted the building to the north and the driveway to the south in order to save a majority of the trees, including a number of specimen trees, along the north property line. Two of the specimen trees that were impacted by the proposed development were approved for removal.

While the applicant was preparing to excavate for the building foundation, discrepancies were identified between the locations of the trees on the plan versus their actual location on site. The plan showed the trees along the north property line when in reality they are 5-7 feet south of the property line. The trees would be impacted by the excavation of the building and would likely not survive. In addition, there are four specimen trees that were tagged on site by the City Forester that were not accounted for on the original plan. These four trees are all within the

building foundation.

Based on the location of the trees, the only way to prevent their removal would be to substantially modify the project through a reduction in the size of the building and a loss of a number of dwelling units. The Planning Commission should be aware that the development value is based on the total number of dwelling units and it is the development value that influences the TIF increment for Town Center and the incentive that the developer is eligible for. Given the increment value and the value of redevelopment for this site as well as the value of adding residences to the mixed use neighborhood, staff is not supportive of making major changes to the project at this time in the process. In Staff's opinion, the project adds substantial value to the Town Center despite the loss of the trees.

That being said, staff does recommend that the removal of the trees will necessitate design modifications to the north elevation. By removing the existing tree line, the north elevation will be highly visible from Mequon Road. Due to this level of visibility, at a minimum, a higher percentage of brick on the façade is warranted. Staff will work with the applicant to ensure appropriate changes to the façade are addressed. In addition, staff will also require that the landscaping plan be modified to include plantings along the north property line.

City Forester Specimen Tree Recommendation:
City Forester, Mike Gies, has inspected the site and has determined that the 13 specimen trees are in good shape and does not recommend their removal unless it is determined that no adjustment should be made to the building or its placement at this time. If the Commission does approve the removal, the applicant shall provide 134" of replacement trees on the property or in a City park or pay $13,400 to the City of Mequon for urban forestry projects.

Staff Recommendation: Planning staff recommends **approval** of the specimen tree removal subject to the following conditions:

1. The applicant shall provide 134" of replacement trees on the property or in a City park or pay $13,400 to the City of Mequon for urban forestry projects.
2. The landscaping plan shall be revised to address the north property line. The plan shall be submitted to staff for review and approval.
3. Staff review and approval of material changes to the north elevation.

Attachments:
Packet (PDF)

Dermond Property Investments

AC	Arrival Corridor	LTD	Limited Use
A-1	Agricultural Preserve	OA	Agricultural Overlay
A-2	General Agricultural	PUD	Planned Unit Development Overlay
B-1	Neighborhood Business	P-1	Park & Recreation
B-2	Community Business	R-1	Single-Family Residential (5 Ac. Min.)
B-3	Office & Service Business	R-1B	Single-Family Residential (2.5 Ac. Min.)
B-4	Business Park	R-2	Single-Family Residential (2.0 Ac. Min.)
B-5	Light Industrial	R-2B	Single-Family Residential (1.5 Ac. Min.)
B-6	Rural Industrial	R-3	Single-Family Residential (1.0 Ac. Min.)
B-7	Rural Business	R-4	Single-Family Residential (3/4 Ac. Min.)
C-1	Shoreland/Wetland Conservancy	R-5	Single-Family Residential (1/2 Ac. Min.)
C-2	General Conservancy	R-6	Single-Family Residential (4 du/Ac)
CGO	Central Growth Overlay	RM	Multi-Family Residential
FFO	Flood Fringe Overlay	TC	Town Center
FW	Floodway	TDR	Transfer of Development Rights
IPS	Institutional & Public Service		

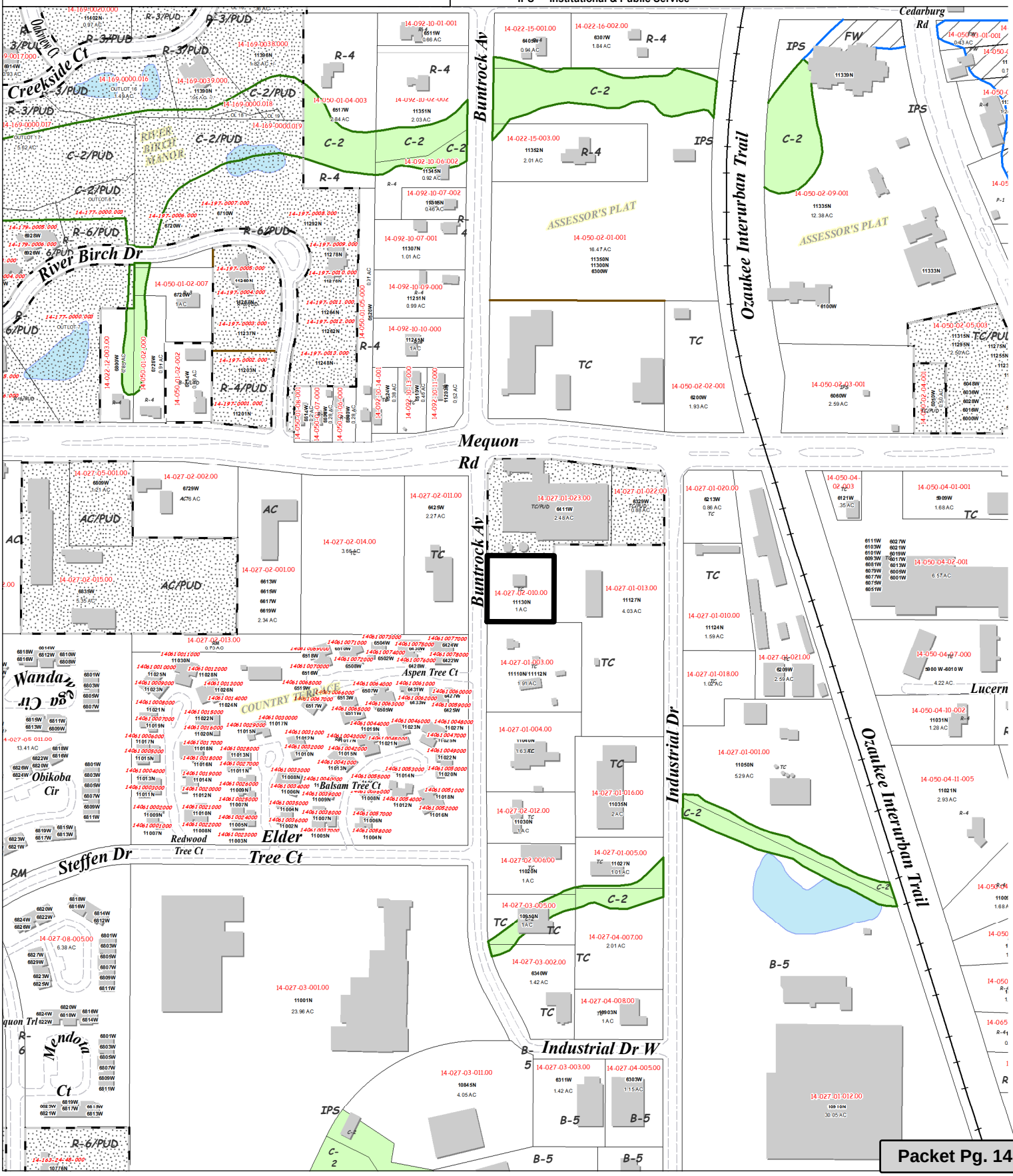

Attachment: Packet (2090 : Dermond Property Investments)

Dermond Property Investments

Attachment: Packet (2090 : Dermond Property Investments)

To: Mequon Planning Commission

From: Mike Gies, City Forester

Date: January 5, 2017

Subject: Dermond Property

Background

The location of the proposed removal is just south of Mequon Rd. on Buntrock, (Dermond property). The original inspection was done in December of 2015. A secondary remark was completed on November 28, 2016. At the time of the secondary remark none of the trees were being proposed for removal, except the two that had already been approved at the earlier planning commission meeting. On January 3, 2017 at a meeting with the job superintendent; it was proposed that 13 specimens would be affected and in turn need to be removed as part of the project. The trees vary in diameter with a (20”) single stem white cedar being the largest, and a (11”) white cedar being the smallest. All of the trees are Cedars, with the majority being white cedars and the only two being red cedars. The trees are approximately 25-30’ in height.

Analysis

The proposal for removals on site only affects the north property line. There are currently two rows of trees in this area. Only two trees exist in the front row, with the remaining eleven in the back row. The tree sizes are as follows: (east to west)**(back row)** (13”) white cedar, (11”) white cedar, (15”) white cedar, (13”) white cedar, (12”) white cedar, (15”) white cedar, (14”) white cedar, (16”) white cedar, (14”) white cedar, (20”) white cedar, (13”) red cedar **(front row)** (10”) white cedar, (13”) white cedar.

All thirteen trees are generally in good condition. There is a small amount of deadwood within the bottom 4-5’ of the trees. With a small amount of pruning the trees would be in nice shape for the future. Unlike some of the trees previously discussed at planning, the trees are branched fully and are not defoliated on any of their sides. The root zones so far are unimpaired and would be in reasonable shape if the correct protection application were to be applied. The trees also maintain a nice buffer between the backside of the corner property and the new building.

Upon inspection on January 3, 2017, the survey for the site had been completed and the corner stakes for the building were in place. The original plans were to work around the thirteen trees in question, and only remove two trees that would be adversely affected during construction. Should the planning commission approve the building in its current staked location the thirteen trees will have to be removed. The dig for the footings will be directly through the root system of eleven of the trees with the other two trees in the front row falling within the proposed buildings foot print. Due to the major damage being done to the trees root zone; there is no chance of survival.

Attachment: Packet (2090 : Dermond Property Investments)

Recommendation

The Forestry Department does not approve of the removal based on inaccurate surveying or planning for the new buildings positioning. Taking into consideration the site being somewhat tight to begin with; adjustments should have been made ahead of time to allow for adequate space to preserve the trees. If there is no adjustment made to the building or placement, the recommendation is in turn to remove the trees. The damage that will occur to the root systems will be irreversible and severely affect the future of the trees. This will cause the trees to be unstable and die in the future.

If the Planning Commission approves the removal of the (13) trees the total DBH would equal (179”). Accordingly, Dermond Properties would be responsible for replacing 75% of the diameter. This would equal (134”) of replacement trees. This would be approximately (45) 3” trees, selected or approved by the forester. In lieu of planting, the owner could donate $13,400.00 to the Mequon Tree Fund, which would be used for Urban Forestry projects. Whether the owner decides to replant or not, the $13,400.00 would be put into a non-lapsing escrow account before a building permit is issued. The money would then be returned after the tree planting is complete.

Thank you,

Mike Gies

Mequon City Forester

Attachment: Packet (2090 : Dermond Property Investments)

NORTH ELEVATION

NORTH - WEST CORNER

NORTH ELEVATION WITH TREES

MEQUON APARTMENTS

DERMOND
PROPERTY INVESTMENTS

eu:a
eppstein uhen : architects

10/20/16

116319-01

© Eppstein Uhen Architects, Inc.

Attachment: Packet (2090 : Dermond Property Investments)

1. STORM INLET
RIM EL. 690.08
12" E. I.E. 687.4
12" NW. I.E. 687.3

2. STORM INLET
RIM EL. 689.90
12" W. I.E. 687.7

3. SANITARY MANHOLE
RIM EL. 694.11
8" N. I.E. 676.9
8" S. I.E. 676.9

4. CATCH BASIN (17" DIA.)
RIM EL. 692.02
15" E. I.E. 685.0

5. SANITARY MANHOLE
RIM EL. 692.46
10" S. I.E. 677.5
10" W I.E. 677.0

6. CATCH BASIN (20" DIA.)
RIM EL. 691.42
6" W. I.E. 685.7
18" E. I.E. 685.0

CP–1
MAG NAIL
N. 365,974.35
E. 584,655.69
EL. 691.68

CP–2
MAG NAIL
N. 365,783.56
E. 584,600.71
EL. 692.42

CP–5
REBAR
N. 365,816.93
E. 584,784.14
EL. 691.75

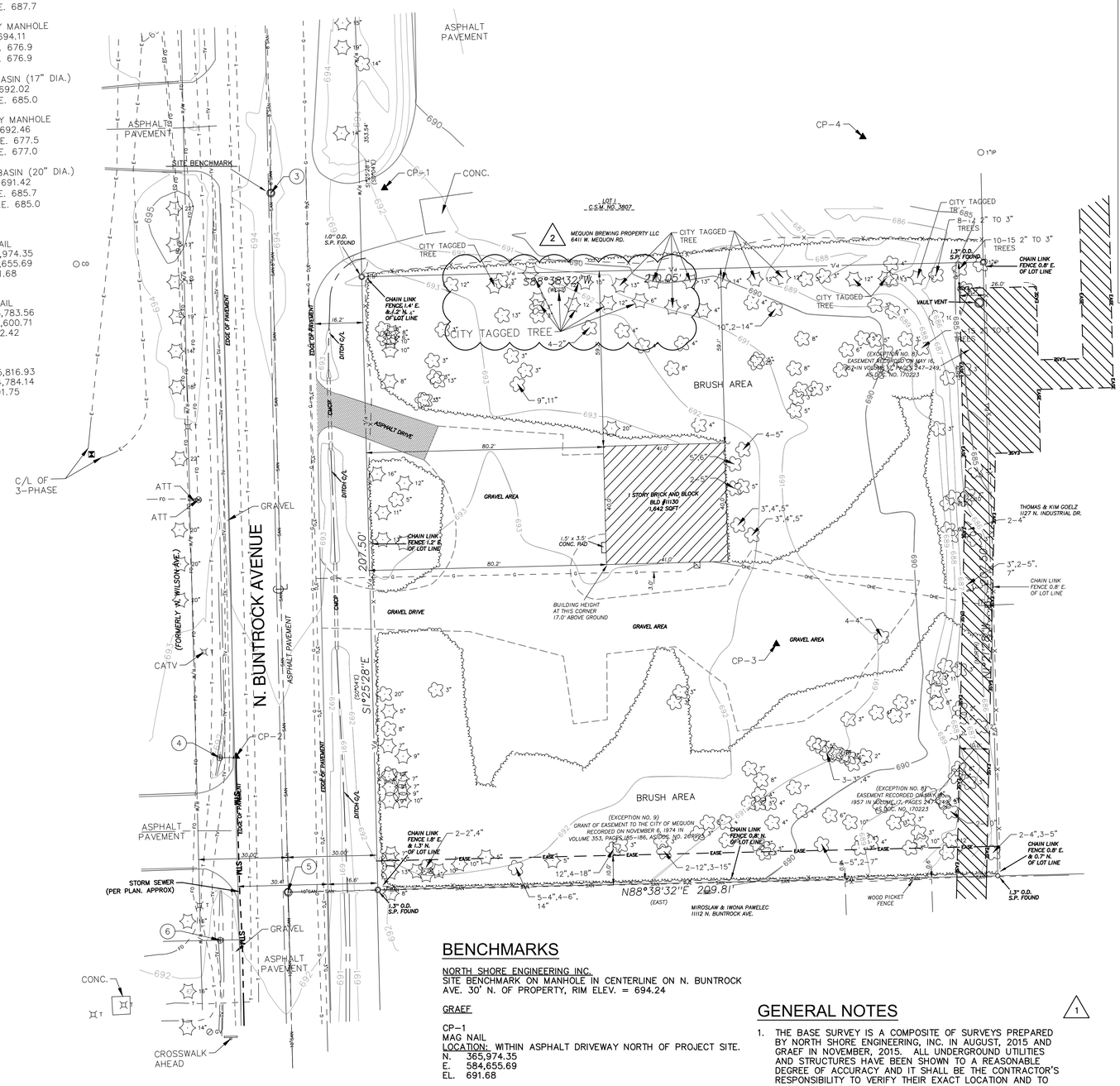

BENCHMARKS

NORTH SHORE ENGINEERING INC.
SITE BENCHMARK ON MANHOLE IN CENTERLINE ON N. BUNTROCK AVE. 30' N. OF PROPERTY, RIM ELEV. = 694.24

GRAEF

CP–1
MAG NAIL
LOCATION: WITHIN ASPHALT DRIVEWAY NORTH OF PROJECT SITE.
N. 365,974.35
E. 584,655.69
EL. 691.68

CP–2
MAG NAIL
LOCATION: WITHIN ASPHALT PAVEMENT, EAST OF SURVEYED STORM STRUCTURE #4.
N. 365,783.56
E. 584,600.71
EL. 692.42

CP–5
REBAR
LOCATION: APPROXIMATLEY 67–FEET SOUTH AND 10.20–FEET WEST OF SURVEYED STORM STRUCTURE #1.
N. 365,816.93
E. 584,784.14
EL. 691.75

GENERAL NOTES

1. THE BASE SURVEY IS A COMPOSITE OF SURVEYS PREPARED BY NORTH SHORE ENGINEERING, INC. IN AUGUST, 2015 AND GRAEF IN NOVEMBER, 2015. ALL UNDERGROUND UTILITIES AND STRUCTURES HAVE BEEN SHOWN TO A REASONABLE DEGREE OF ACCURACY AND IT SHALL BE THE CONTRACTOR'S RESPONSIBILITY TO VERIFY THEIR EXACT LOCATION AND TO AVOID DAMAGE THERETO.
2. TREE SURVEY WAS PREPARED BY GRAEF, IN NOVEMBER, 2015. TREE SURVEY HAS BEEN MODIFIED DUE TO ADDITIONAL INFORMATION FROM THE CITY OF MEQUON.
3. COORDINATES ARE BASED THE WISCONSIN COUNTY COORDINATE SYSTEM (WCCS), OZAUKEE COUNTY. NORTH AMERICAN DATUM OF 1983, 2011 ADJUSTMENT (NAD83(2011)). NORTH AMERICAN VERTICAL DATUM OF 1988 (NAVD88(2012)), USING THE WISCONSIN CONTINUALLY OPERATING REFERENCE STATIONS (WISCORS).
4. CONTRACTOR SHALL VERIFY LOCATION OF WORK AND REPORT ANY DISCREPANCIES TO THE ENGINEER PRIOR TO COMMENCING WORK.

NORTH SHORE ENGINEERING LEGEND

CONIFEROUS TREES
DECIDUOUS TREES
WELL
ELECTRIC MANHOLE
TELEPHONE MANHOLE
SQUARE MANHOLE
SHUTOFF VALVE
BUSH
CHISELED CROSS
PROPERTY CORNER (1.3" O.D. S.P. FOUND)
PARKER KALON NAIL
CONCRETE MONUMENT
BASKETBALL HOOP
YARD LIGHT
STREET LIGHT
SEWER CLEANOUT
SPRINKLER HEAD
ELECTRIC PEDESTAL
TELEPHONE PEDESTAL
CATV PEDESTAL
GAS VALVE
POWER POLE
FIRE HYDRANT
SIGN
CATCH BASIN/INLET
EXISTING MANHOLE
WATER VALVE
HANDHOLE
ELECTRIC METER
GAS METER
GUY ANCHOR
FLOOD LIGHT
PULL BOX

FENCE LINE
PROPERTY LINE
RIGHT–OF–WAY
EASEMENT LIMITS
BLDG. OFFSET LINE
C/L ROAD
CULVERT PIPE
DISTANCE PER PLAT

UTILITIES
BURIED GAS
BURIED ELEC.
BURIED TELEPHONE
OVERHEAD ELEC.
OVERHEAD TELEPHONE
SANITARY SEWER
STORM SEWER
WATER

0 10' 20' 40'
SCALE: 1" = 20'

GRAEF LEGEND

TRAVERSE POINT
CONCRETE MONUMENT W/BRASS CAP
POWER POLE
LIGHT POLE
TELEPHONE POLE
SERVICE POLE
FLAG POLE
MANHOLE
STORM INLET
WATER VALVE
GAS VALVE
FIRE HYDRANT
MAIL BOX
ELECTRIC TRANSFORMER
TELEPHONE PEDESTAL
CONTROL BOX
RAILROAD SIGNAL
TRAFFIC SIGNAL
GUY WIRE
MONUMENT
1" IRON PIPE
2" IRON PIPE
VENT PIPE
WELL
ELECTRIC RISER
GUARD POST
MARKER POST
TELEPHONE BOOTH
GATE POST
METAL POST
FUEL TANK
PARKING METER
SPRINKLER
HANDHOLE
WATER METER
FIRE ALARM
POLICE TELEPHONE
MISCELLANEOUS METER
PROPANE TANK
WOOD POST
HIGH TENSION TOWER

SEPTIC TANK
DRAIN TILE
PVC PIPE
CLEANOUT
SUMP DISCHARGE
IRON PIPE
REBAR
BENCH MARK
CHISELED SQUARE
CHISELED CROSS
SOIL BORING
SIGNAL MANHOLE
ELECTRIC MANHOLE
TELEPHONE MANHOLE
GAS MANHOLE
WATER VALVE PIT
GUY POLE
GAS SERVICE VALVE
WATER SERVICE VALVE
CATCH BASIN
WATER VAULT
WATER VALVE BOX
GAS VALVE BOX
CABLE TV PEDESTAL
POWER POLE W/LIGHT
TANK
GROUND LIGHT
GRATE
MONITORING WELL
COMBINED POWER POLE
ABANDONED POLE
FENCE POST
YARD LIGHT
DELINEATOR POST
PULL BOX
AIR CONDITIONER
DECIDUOUS TREE
CONIFEROUS TREE
STUMP
BUSH
MARSH AREA
SIGN

EDGE OF BRUSH
EDGE OF WOODS
HEDGE ROW
RIP RAP
CHAIN LINK FENCE
WOOD FENCE
SPLIT RAIL FENCE
WOVEN WIRE FENCE
GUARD RAIL
BURIED CABLE TV
BURIED ELECTRIC LINE
OVERHEAD ELECTRIC LINE
BURIED FIRE PROTECTION
BURIED FIBER OPTIC
BURIED GAS MAIN
BURIED FORCE MAIN
BURIED SIGNAL LINE
BURIED SANITARY SEWER
BURIED STEAM LINE
BURIED STORM SEWER
BURIED TELEPHONE LINE
OVERHEAD TELEPHONE LINE
BURIED WATER MAIN
EXISTING PROPERTY LINE
EXISTING RIGHT OF WAY
EXISTING EASEMENT
PR. BURIED CABLE TV
PR. BURIED ELECTRIC LINE
PR. BURIED FIRE PROTECTION
PR. BURIED FIBER OPTIC
PR. BURIED GAS MAIN
PR. BURIED FORCE MAIN
PR. BURIED SANITARY SEWER
PR. BURIED STORM SEWER
PR. BURIED TELEPHONE LINE
PR. BURIED WATER MAIN

eppstein uhen : architects
milwaukee 333 East Chicago Street Milwaukee, Wisconsin 53202 telephone 414.271.5350
madison 309 West Johnson Street, Suite 202 Madison, Wisconsin 53703 telephone 608.442.5350

GRAEF
One Honey Creek Corporate Center
125 South 84th Street, Suite 401
Milwaukee, WI 53214-1469
414 / 259 1500
414 / 259 0037 fax
www.graef-usa.com

PROJECT INFORMATION

MEQUON APARTMENTS

11130 BUNTROCK AVE
MEQUON, WI 53092

ISSUANCE AND REVISIONS

Bid Package
Bid Package Description

#	DATE	DESCRIPTION
1	12/13/2016	ADDENDUM NO. 1
2	TBD	ADDENDUM NO. 2

SHEET INFORMATION

PROGRESS DOCUMENTS NOT FOR CONSTRUCTION

These documents reflect progress and intent and may be subject to change, including additional detail. These are not final construction documents and should not be used for final bidding or construction-related purposes.

PROJECT MANAGER	JTM
PROJECT NUMBER	116319-01
DATE	11-07-2016

EXISTING SITE CONDITIONS PLAN

C100

© Eppstein Uhen Architects, Inc.

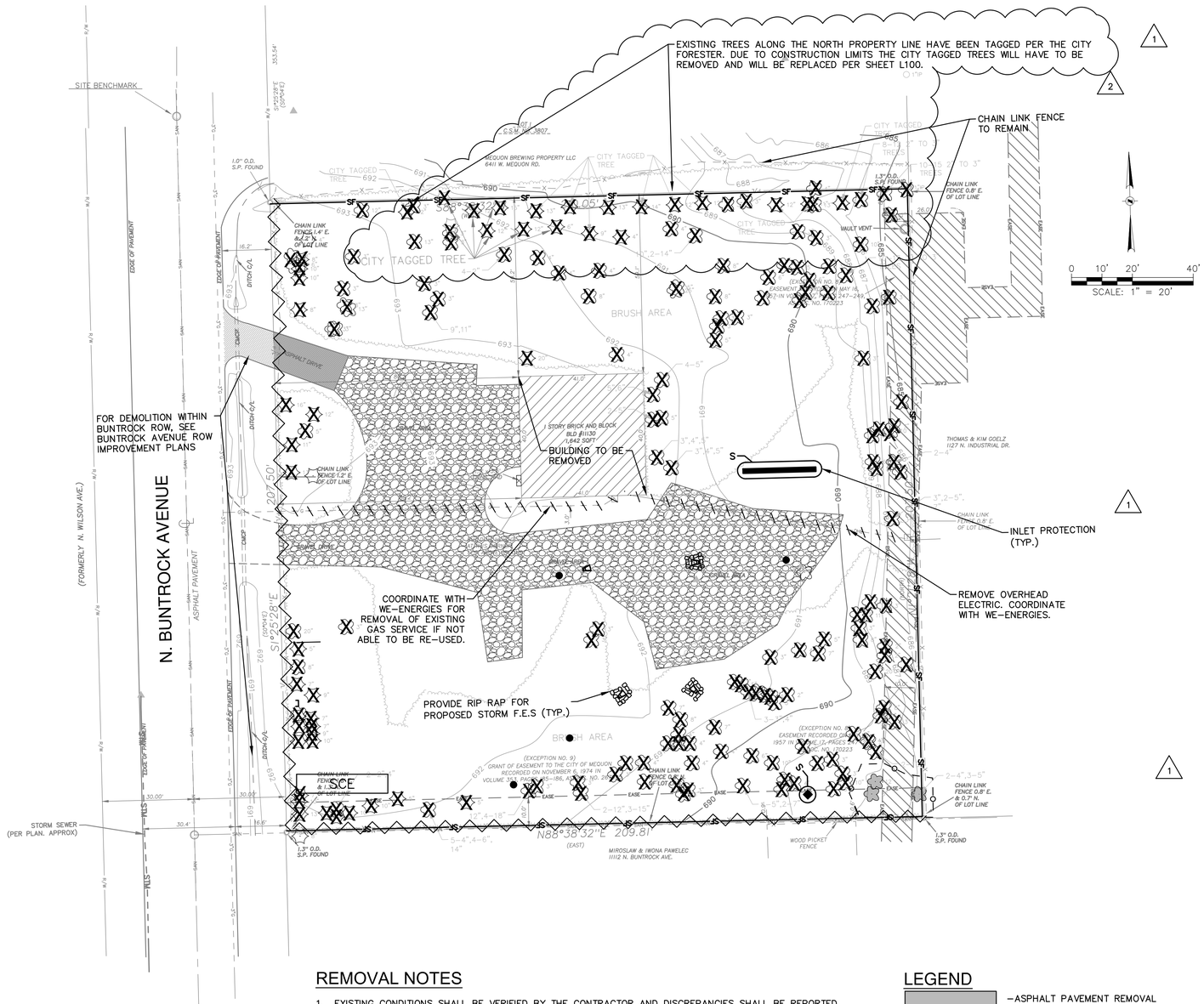

EROSION CONTROL NOTES

1. CONSTRUCTION SITE EROSION CONTROL AND SEDIMENTATION CONTROL SHALL COMPLY WITH THE REQUIREMENTS OF THE CITY OF MEQUON, AND SHALL EMPLOY EROSION CONTROL METHODS AS SHOWN AND SPECIFIED IN THE WISCONSIN DEPARTMENT OF NATURAL RESOURCES (WDNR) "CONSTRUCTION SITE EROSION AND SEDIMENT CONTROL TECHNICAL STANDARDS".
2. ALL EROSION CONTROL MEASURES SHALL BE ADJUSTED TO MEET FIELD CONDITIONS AT THE TIME OF CONSTRUCTION AND SHALL BE INSTALLED PRIOR TO ANY GRADING OR DISTURBANCE OF EXISTING SURFACE MATERIAL ON THE SITE.
3. ALL EROSION AND SEDIMENT CONTROL MEASURES WILL BE CHECKED FOR STABILITY AND OPERATION AFTER A RAINFALL OF 0.5 INCHES OR MORE, BUT NO LESS THAN ONCE EVERY WEEK. MAINTENANCE OF ALL EROSION CONTROL STRUCTURES SHALL BE PROVIDED TO INSURE INTENDED PURPOSE IS ACCOMPLISHED. REPAIRS AND MAINTENANCE SHALL BE COMPLETED WITHIN 24 HOURS OF INSPECTION. CONTRACTOR SHALL BE RESPONSIBLE FOR CLEANUP AND REMOVAL OF ALL SEDIMENT WHEN LEAVING PROPERTY. EROSION CONTROL MEASURES MUST BE IN WORKING CONDITION AT END OF EACH WORK DAY.
4. SILT FENCE SHALL BE INSTALLED IN THE LOCATIONS SHOWN ON THE CONSTRUCTION PLANS. SEDIMENT DEPOSITS WILL BE REMOVED FROM BEHIND THE SILT FENCE WHEN DEPOSITS REACH A DEPTH OF 6 INCHES. THE SILT FENCE WILL BE REPAIRED OR REPLACED AS NECESSARY TO MAINTAIN A BARRIER.
5. FILTER FABRIC SHALL BE INSTALLED BENEATH INLET COVERS TO TRAP SEDIMENT AS PER INLET PROTECTION DETAIL IN THE LOCATIONS SHOWN ON THE CONSTRUCTION PLANS.
6. EROSION CONTROL MEASURES SHALL BE MAINTAINED ON A CONTINUING BASIS UNTIL SITE IS FULLY STABILIZED.
7. PERIODIC STREET SWEEPING SHALL BE COMPLETED TO MAINTAIN THE PUBLIC STREET FREE OF DUST AND DIRT.
8. SILT FENCE SHALL BE INSTALLED IN HORSESHOE FASHION AROUND ALL TOPSOIL AND FILL STOCKPILES. NOTIFY CITY OF MEQUON OF ANY NEW STOCKPILE LOCATIONS.
9. CONSTRUCTION SEQUENCE FOR EROSION CONTROL INCLUDES:
   1. INSTALL STABILIZED CONSTRUCTION ENTRANCE.
   2. INSTALL SILT FENCE AND INLET PROTECTION.
   3. STRIP TOPSOIL AND REMOVE PAVEMENT. TOPSOIL DEPTH VARY THROUGHOUT THE SITE. REFER TO GEOTECHNICAL REPORT.
   4. PERFORM ROUGH GRADING AND BUILDING EXCAVATION.
   5. INSTALL UTILITIES. INSTALL INLET PROTECTION ON NEW INLETS. INSTALL RIPRAP AT NEW OUTFALLS.
   6. CONSTRUCT ROAD ADDITION.
   7. INSTALL PAVEMENTS.
   8. INSTALL LANDSCAPING ON COMPLETED SITE WITHIN 7 DAYS OF COMPLETING CONSTRUCTION.
   9. REMOVE EROSION CONTROL MEASURES ONLY WHEN SITE IS FULLY STABILIZED.
10. SITE DEWATERING. WATER PUMPED FROM THE SITE SHALL BE TREATED BY SEDIMENT BASINS OR OTHER APPROPRIATE BEST MANAGEMENT PRACTICES SPECIFIED IN THE WDNR "CONSTRUCTION SITE EROSION AND SEDIMENT CONTROL TECHNICAL STANDARDS". WATER SHALL NOT BE DISCHARGED IN A MANNER THAT CAUSES EROSION OF THE SITE, ADJACENT SITES, OR RECEIVING CHANNELS.
11. WASTE AND MATERIAL DISPOSAL. ALL WASTE AND UNUSED BUILDING MATERIALS (INCLUDING GARBAGE, DEBRIS, CLEANING WASTES, WASTEWATER, TOXIC MATERIALS, OR HAZARDOUS MATERIALS) SHALL BE PROPERLY DISPOSED AND NOT ALLOWED TO BE CARRIED OFF-SITE BY RUNOFF OR WIND.
12. TRACKING. EACH SITE SHALL HAVE GRAVELED ROAD, ACCESS DRIVES AND PARKING AREAS OF SUFFICIENT WIDTH AND LENGTH TO PREVENT SEDIMENT FROM BEING TRACKED ONTO PUBLIC OR PRIVATE ROADWAYS. ANY SEDIMENT REACHING A PUBLIC OR PRIVATE ROADWAY SHALL BE REMOVED BY STREET CLEANING, TO THEE SATISFACTION OF THE CITY OF MEQUON BEFORE THE END OF EACH WORKDAY. FLUSHING MAY NOT BE USED UNLESS SEDIMENT WILL BE CONTROLLED BY A SEDIMENT BASIN OR OTHER APPROPRIATE BMP. NOTIFY THE CITY OF MEQUON FOR CHANGES IN THE STONE CONSTRUCTION ENTRANCE LOCATION.
13. SEDIMENT CLEANUP. ALL OFF-SITE SEDIMENT DEPOSITS OCCURRING AS A RESULT OF A STORM EVENT SHALL BE CLEANED UP BY THE END OF THE NEXT WORK DAY. ALL OTHER OFF-SITE SEDIMENT DEPOSITS OCCURRING AS A RESULT OF CONSTRUCTION ACTIVITIES SHALL BE CLEANED UP BY THE END OF THE THE WORK DAY.
14. ALL DISTURBED GROUND LEFT INACTIVE FOR SEVEN OR MORE DAYS SHALL BE STABILIZED BY TEMPORARY OR PERMANENT SEEDING, AND MULCHING SODDING, COVERING WITH TARPS, OR EQUIVALENT BEST MANAGEMENT PRACTICES. IF TEMPORARY SEEDING IS USED, A PERMANENT COVER SHALL ALSO BE REQUIRED AS PART OF THE FINAL SITE STABILIZATION. SEEDING OR SODDING SHALL BE REQUIRED AS PART OF THE FINAL SITE STABILIZATION.
15. PERMANENT SOD SHALL BE ESTABLISHED NO LATER THAN SEPTEMBER 15TH. IF PERMANENT SOD IS NOT ESTABLISHED, TEMPORARY SEEDING SHALL BE ESTABLISHED NO LATER THAN OCTOBER 15TH. ALL SEEDED AREAS MUST BE MULCHED AT A RATE OF 1.5 TO 2 TONS PER ACRE AND ANCHORED BY EITHER CRIMPING OR BY APPLYING A TACKIFIER.
16. SEE SHEET L100 FOR PERMANENT SOD RESTORATION.
17. USE ANNUAL RYE SEED MIX AT 100 POUNDS PER ACRE AS A TEMPORARY SEED MIX. PERMANENT SOD SHALL FOLLOW WITHIN ONE YEAR. IF TEMPORARY SEEDING IS NOT ESTABLISHED BY OCTOBER 15TH, USE CLASS I TYPE B MATTING ON ALL SLOPES 4:1 OR STEEPER.
18. SOIL OR DIRT STORAGE PILES SHALL BE LOCATED A MINIMUM OF TWENTY-FIVE FEET FROM ANY DOWNSLOPE ROAD, LAKE, STREAM, WETLAND, OR DRAINAGE CHANNEL. STRAW BALE OR FILTER FABRIC FENCES SHALL BE PLACED ON THE DOWN SLOPE SIDE OF THE PILE. IF REMAINING FOR MORE THAN THIRTY DAYS. PILES SHALL BE STABILIZED BY MULCHING, VEGETATIVE COVER, TARPS, OR OTHER MEANS.
19. WHEN THE DISTURBED AREA HAS BEEN STABILIZED BY PERMANENT VEGETATION OR OTHER MEANS, TEMPORARY BEST MANAGEMENT PRACTICES SUCH AS FILTER FABRIC FENCES, STRAW BALES, SEDIMENT AND SEDIMENT TRAPS SHALL BE REMOVED.
20. NOTIFY THE CITY WITHIN TWO WORKING DAYS OF COMMENCING ANY LAND DEVELOPMENT OR LAND DISTURBING ACTIVITY.
21. NOTIFY THE CITY OF COMPLETION OF ANY BEST MANAGEMENT PRACTICES WITHIN THE NEXT WORKING DAY AFTER THEIR INSTALLATION.
22. OBTAIN PERMISSION IN WRITING FROM THE CITY OF MEQUON ENGINEERING DEPARTMENT PRIOR TO MODIFYING THE EROSION CONTROL PLAN. NOTIFY WDNR AT LEAST FIVE WORKING DAYS PRIOR TO IMPLEMENTING CHANGES TO THE EROSION CONTROL PLAN.
23. REPAIR ANY SILTATION OR EROSION DAMAGE TO ADJOINING SURFACES AND DRAINAGE WAYS RESULTING FROM LAND DEVELOPMENT OR LAND DISTURBING ACTIVITIES.
24. KEEP A COPY OF THE EROSION CONTROL PLAN ON SITE.

REMOVAL NOTES

1. EXISTING CONDITIONS SHALL BE VERIFIED BY THE CONTRACTOR AND DISCREPANCIES SHALL BE REPORTED TO THE ENGINEER PRIOR TO COMMENCING WORK.
2. CONTRACTOR SHALL VERIFY ALL EXISTING UTILITY LINES NOTED FOR ABANDONMENT OR REMOVAL. EXISTING UTILITIES THAT ARE TO BE ABANDONED OR REMOVED SHALL BE RESPECTIVELY ABANDONED OR REMOVED TO THE LOCATIONS INDICATED ON THIS PLAN. ALL UTILITY STRUCTURES LOCATED ALONG REMOVED UTILITY LINES SHALL BE REMOVED IN THEIR ENTIRETY.
3. ITEMS SCHEDULED FOR REMOVAL AND EXCESS EXCAVATED MATERIALS SHALL BE DISPOSED OF OFF-SITE IN ACCORDANCE WITH ANY APPLICABLE REGULATIONS.
4. CONTRACTOR IS RESPONSIBLE FOR SECURING THE JOB SITE TO PROTECT THE PUBLIC.
5. CONTRACTOR SHALL COMPLY WITH LOCAL, STATE, AND FEDERAL CODES, RULES AND REGULATIONS APPLICABLE TO DEMOLITION WORK INCLUDING BUT NOT LIMITED TO EROSION CONTROL, AIR POLLUTION, NOISE POLLUTION, AND WASTE DISPOSAL.
6. CONTRACTOR SHALL REPLACE PAVEMENT, CURB AND GUTTER, TREES, LAWN AREA, ANY ABOVE GROUND APPURTENCES, OR ANY OTHER ITEM THAT WAS DAMAGED AS A RESULT OF CONSTRUCTION RELATED ACTIVITIES AS DEEMED BY OWNERS REPRESENTATIVE THAT WAS NOT CALLED OUT FOR REMOVAL OR REPLACEMENT. CONTRACTOR SHALL REPLACE/REPAIR DAMAGED ITEM TO THE SATISFACTION OF OWNER'S REPRESENTATIVE AT NO ADDITIONAL COST TO THE OWNER.
7. TREE PROTECTION FENCING LOCATIONS SHOWN ARE APPROXIMATE. ALL EXISTING TREES OUTSIDE OF GRADING LIMITS ARE INTENDED TO REMAIN. FINAL LOCATIONS OF FENCING SHALL BE DETERMINED IN THE FIELD AND AS IDENTIFIED ON CONSTRUCTION DETAILS. ADDITIONAL FENCING MAY BE REQUIRED. COORDINATE WITH OWNER'S REPRESENTATIVE. TREE PROTECTION FENCE SHALL REMAIN IN PLACE THROUGHOUT CONSTRUCTION.

LEGEND

- –ASPHALT PAVEMENT REMOVAL
- –GRAVEL PAVEMENT REMOVAL
- –UTILITY REMOVAL
- –FENCE REMOVAL
- –TREE REMOVAL
- –TREE TO REMAIN
- SCE –STONE CONSTRUCTION ENTRANCE (1 / C900)
- SF –SILT FENCE (5 / C900)
- S –INLET PROTECTION (2 / C900)
- –TREE PROTECTION FENCE (3 / C900)
- –RIP RAP

GENERAL NOTES

1. THE BASE SURVEY IS A COMPOSITE OF SURVEYS PREPARED BY NORTH SHORE ENGINEERING, IN AUGUST, 2015 AND GRAEF IN NOVEMBER, 2015. ALL UNDERGROUND UTILITIES AND STRUCTURES HAVE BEEN SHOWN TO A REASONABLE DEGREE OF ACCURACY AND IT SHALL BE THE CONTRACTOR'S RESPONSIBILITY TO VERIFY THEIR EXACT LOCATION AND TO AVOID DAMAGE THERETO.
2. TREE SURVEY WAS PREPARED BY GRAEF, IN NOVEMBER, 2015. TREE SURVEY HAS BEEN MODIFIED DUE TO ADDITIONAL INFORMATION FROM THE CITY OF MEQUON.
3. COORDINATES ARE BASED THE WISCONSIN COUNTY COORDINATE SYSTEM (WCCS), OZAUKEE COUNTY. NORTH AMERICAN DATUM OF 1983, 2011 ADJUSTMENT (NAD83(2011)). NORTH AMERICAN VERTICAL DATUM OF 1988 (NAVD88(2012)), USING THE WISCONSIN CONTINUALLY OPERATING REFERENCE STATIONS (WISCORS).
4. CONTRACTOR SHALL VERIFY LOCATION OF WORK AND REPORT ANY DISCREPANCIES TO THE ENGINEER PRIOR TO COMMENCING WORK.

eppstein uhen : architects
milwaukee 333 East Chicago Street Milwaukee, Wisconsin 53202 telephone 414.271.5350
madison 309 West Johnson Street, Suite 202 Madison, Wisconsin 53703 telephone 608.442.5350

GRAEF
One Honey Creek Corporate Center
125 South 84th Street, Suite 401
Milwaukee, WI 53214-1469
414 / 259 1500
414 / 259 0037 fax
www.graef-usa.com

PROJECT INFORMATION

MEQUON APARTMENTS

11130 BUNTROCK AVE
MEQUON, WI 53092

ISSUANCE AND REVISIONS

Bid Package
Bid Package Description

#	DATE	DESCRIPTION
1	12/13/2016	ADDENDUM NO. 1
2	TBD	ADDENDUM NO. 2

SHEET INFORMATION

PROGRESS DOCUMENTS NOT FOR CONSTRUCTION

These documents reflect progress and intent and may be subject to change, including additional detail. These are not final construction documents and should not be used for final bidding or construction-related purposes.

PROJECT MANAGER	JTM
PROJECT NUMBER	116319-01
DATE	11-07-2016

SITE DEMOLITION AND EROSION CONTROL PLAN

C200

© Eppstein Uhen Architects, Inc.

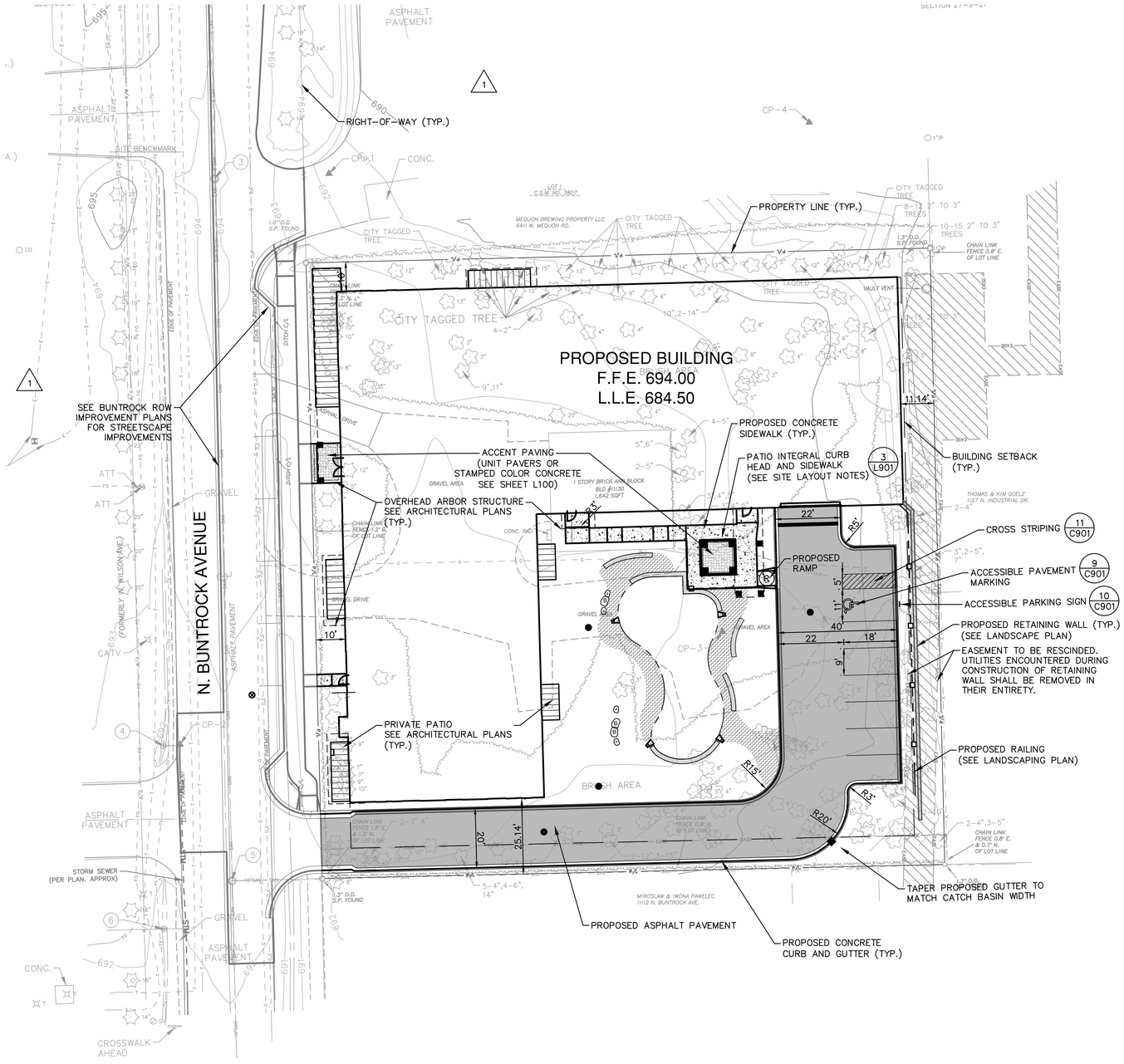

0 10' 20' 40'
SCALE: 1" = 20'

SITE INFORMATION

TOTAL EXTERIOR PARKING STALLS – 8

SITE ACREAGE – 0.95 (41,501 SF)

OPEN SPACE RATIO – 0.31/1.00

GENERAL NOTES

1. THE BASE SURVEY IS A COMPOSITE OF SURVEYS PREPARED BY NORTH SHORE ENGINEERING, INC. IN AUGUST, 2015 AND GRAEF IN NOVEMBER, 2015. ALL UNDERGROUND UTILITIES AND STRUCTURES HAVE BEEN SHOWN TO A REASONABLE DEGREE OF ACCURACY AND IT SHALL BE THE CONTRACTOR'S RESPONSIBILITY TO VERIFY THEIR EXACT LOCATION AND TO AVOID DAMAGE THERETO.
2. TREE SURVEY WAS PREPARED BY GRAEF, IN NOVEMBER, 2015. TREE SURVEY HAS BEEN MODIFIED DUE TO ADDITIONAL INFORMATION FROM THE CITY OF MEQUON. 2
3. COORDINATES ARE BASED THE WISCONSIN COUNTY COORDINATE SYSTEM (WCCS), OZAUKEE COUNTY. NORTH AMERICAN DATUM OF 1983, 2011 ADJUSTMENT (NAD83(2011)). NORTH AMERICAN VERTICAL DATUM OF 1988 (NAVD88(2012)), USING THE WISCONSIN CONTINUALLY OPERATING REFERENCE STATIONS (WISCORS).
4. CONTRACTOR SHALL VERIFY LOCATION OF WORK AND REPORT ANY DISCREPANCIES TO THE ENGINEER PRIOR TO COMMENCING WORK.

LAYOUT NOTES

1. THE BUILDING OUTLINE SHOWN IS FOR REFERENCE PURPOSES ONLY AND SHALL NOT BE USED FOR STAKING PURPOSES. THE CONTRACTOR SHALL COORDINATE WITH THE ARCHITECT AND STRUCTURAL ENGINEER ON THE STAKING OF THE BUILDING.
2. CONTRACTOR SHALL COORDINATE WITH THE ELECTRICAL ENGINEER ON STAKING OF THE SITE LIGHTS.
3. ALL DIMENSIONS SHOWN ARE TO THE EDGE OF PAVEMENT OR FACE OF CURB WHERE CONCRETE CURB IS SHOWN.
4. STANDARD CURB RADIUS IS 3' UNLESS INDICATED OTHERWISE.
5. PAVEMENT STRIPING COLOR SHALL BE WHITE.
6. REFER TO LANDSCAPING PLANS FOR SITE RESTORATION INFORMATION AND DETAILS.
7. CONTRACTOR SHALL SUBMIT A CONCRETE JOINTING PLAN TO THE ENGINEER FOR REVIEW AND APPROVAL PRIOR TO COMMENCING CONSTRUCTION. JOINTING PLAN SHALL INDICATE: POUR SEQUENCE, LOCATION OF CONSTRUCTION, ISOLATION, CONTRACTION JOINTS, AND TYPE OF REINFORCEMENT.
8. CONCRETE SIDEWALK SURROUNDING PATIO AREA SHALL BE INTEGRAL WITH PATIO CURB HEAD. FOR PATIO FENCING SEE ARCHITECTURAL PLANS. CURB HEAD WILL BE FLUSH WITH SIDEWALK ON NORTH FACE OF PATIO AREA AND VARY ON THE EAST, WEST AND SOUTH FACE OF OF THE PATIO AREA.

LEGEND

- –PROPOSED ASPHALT PAVEMENT (1 C901)
- –PROPOSED CONCRETE SIDEWALK (2 C901)
- –1 1/2"–3" DECORATIVE GRAVEL, 3" THICK – SEE SHEET L100
- –LIMESTONE OUTCROP RETAINING WALLS – SEE SHEET L100
- –ACCENT PAVING (UNIT PAVERS OR STAMPED COLORED CONCRETE)
- –PROPOSED CONCRETE CURB AND GUTTER (3 C901)
- –PROPOSED HIGHSIDE CONCRETE CURB AND GUTTER (4 C901)
- –PROPOSED FLUSH CONCRETE CURB AND GUTTER (5 C901)
- –PROPOSED ADA RAMP WITH TRUNCATED DOMES (6,8 C901)
- –LIMESTONE OUTCROP BOULDER 1'–2' – SEE SHEET L100
- –LIMESTONE OUTCROP BOULDER 3'–4 – SEE SHEET L100
- –PROPOSED RAILING
- –PRIVATE PATIO (PER ARCHITECTURAL PLANS)
- –OVERHEAD ARBOR STRUCTURE (PER ARCHITECTURAL PLANS)

1

eu:a
eppstein uhen : architects
milwaukee 333 East Chicago Street Milwaukee, Wisconsin 53202 telephone 414.271.5350
madison 309 West Johnson Street, Suite 202 Madison, Wisconsin 53703 telephone 608.442.5350

GRAEF
One Honey Creek Corporate Center
125 South 84th Street, Suite 401
Milwaukee, WI 53214-1469
414 / 259 1500
414 / 259 0037 fax
www.graef-usa.com

PROJECT INFORMATION

MEQUON APARTMENTS

11130 BUNTROCK AVE
MEQUON, WI 53092

ISSUANCE AND REVISIONS

Bid Package
Bid Package Description

#	DATE	DESCRIPTION
1	12/13/2016	ADDENDUM NO. 1
2	TBD	ADDENDUM NO. 2

SHEET INFORMATION

PROGRESS DOCUMENTS NOT FOR CONSTRUCTION

These documents reflect progress and intent and may be subject to change, including additional detail. These are not final construction documents and should not be used for final bidding or construction-related purposes.

PROJECT MANAGER	JTM
PROJECT NUMBER	116319-01
DATE	11-07-2016

SITE LAYOUT PLAN

C300

© Eppstein Uhen Architects, Inc.

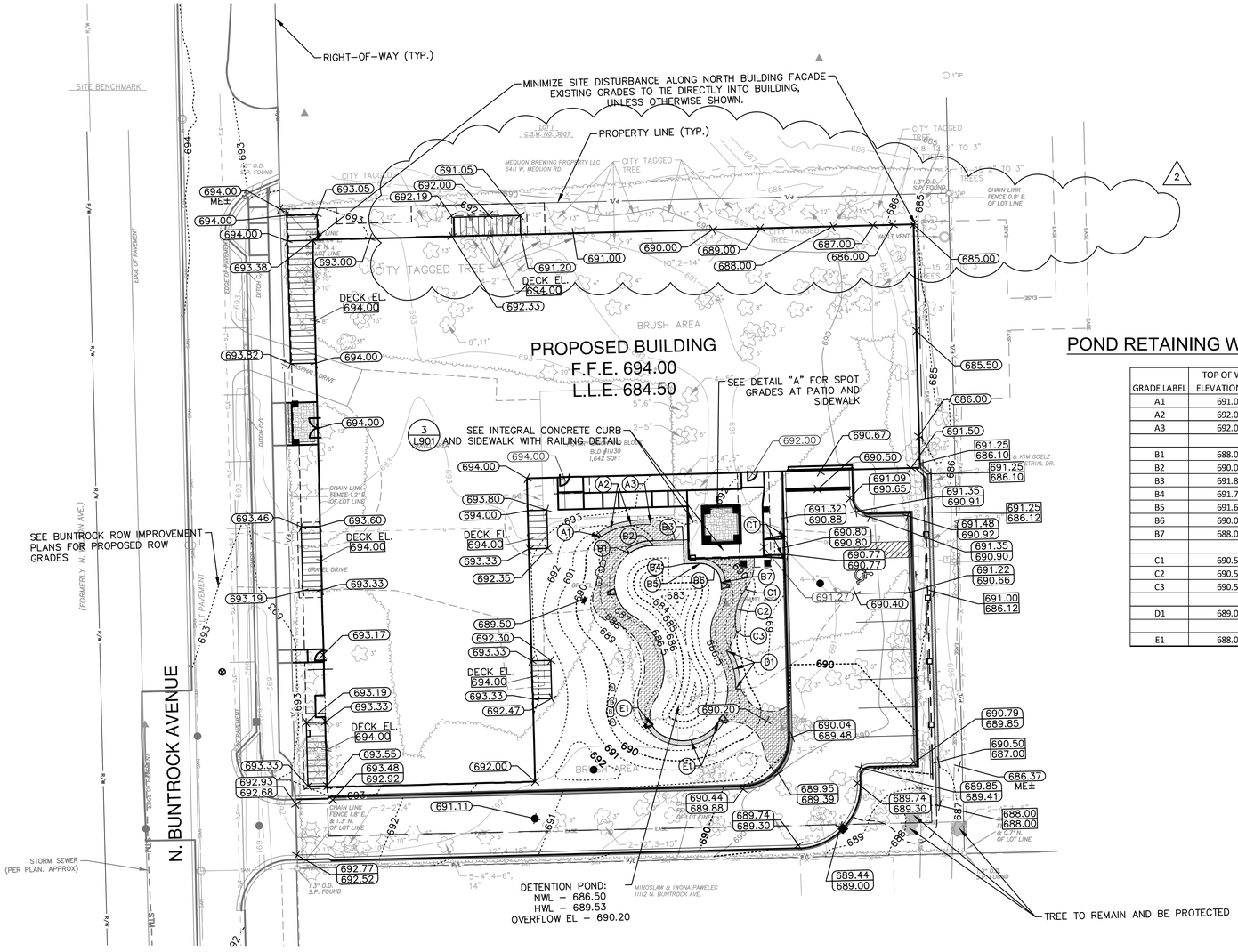

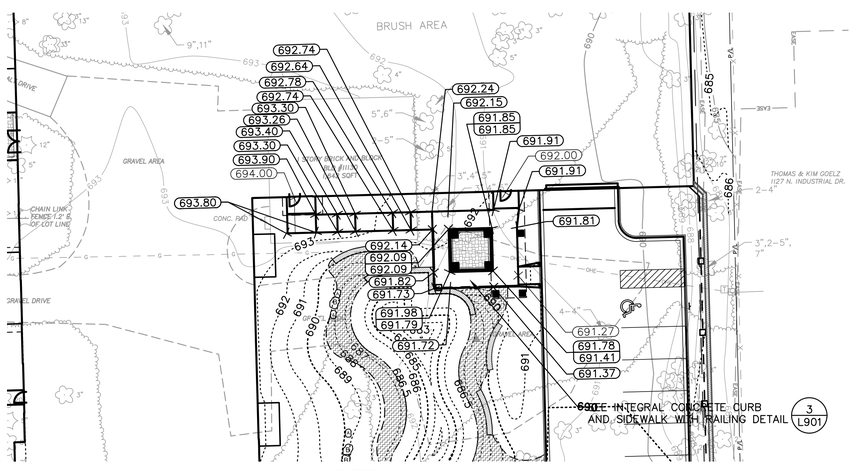

DETAIL "A"

POND RETAINING WALL GRADING TABLE

GRADE LABEL	TOP OF WALL ELEVATION (FT.)	BOTTOM OF WALL ELEVATION (FT.)
A1	691.00	690.00
A2	692.00	690.00
A3	692.00	691.00
B1	688.00	686.50
B2	690.00	686.50
B3	691.83	686.50
B4	691.72	686.50
B5	691.65	686.50
B6	690.00	686.50
B7	688.00	686.50
C1	690.50	690.00
C2	690.50	688.50
C3	690.50	689.50
D1	689.00	687.50
E1	688.00	686.50

LEGEND

- 100 — EXISTING CONTOUR
- 100 — PROPOSED CONTOUR
- PROPOSED CURB AND GUTTER (3 / C901)
- PROPOSED HIGHSIDE CURB AND GUTTER (4 / C901)
- PROPOSED FLUSH CURB AND GUTTER (5 / C901)
- PROPOSED MANHOLE (5 / C902)
- PROPOSED CATCH BASIN (4 / C902)
- PROPOSED FLARED END SECTION (FES) (6 / C902)
- (R) PROPOSED ADA RAMP WITH TRUNCATED DOMES (6,8 / C901)
- (100.00) SPOT ELEVATION
- (100.00 / 100.00) TOP OF CURB / FLANGE LINE/PAVEMENT ELEVATION
- (100.00 / 100.00) TOP OF WALL ELEVATION / BOTTOM OF WALL ELEVATION

GENERAL NOTES

1. THE BASE SURVEY IS A COMPOSITE OF SURVEYS PREPARED BY NORTH SHORE ENGINEERING, INC. IN AUGUST, 2015 AND GRAEF IN NOVEMBER, 2015. ALL UNDERGROUND UTILITIES AND STRUCTURES HAVE BEEN SHOWN TO A REASONABLE DEGREE OF ACCURACY AND IT SHALL BE THE CONTRACTOR'S RESPONSIBILITY TO VERIFY THEIR EXACT LOCATION AND TO AVOID DAMAGE THERETO.
2. TREE SURVEY WAS PREPARED BY GRAEF, IN NOVEMBER, 2015. TREE SURVEY HAS BEEN MODIFIED DUE TO ADDITIONAL INFORMATION FROM THE CITY OF MEQUON. (2)
3. COORDINATES ARE BASED THE WISCONSIN COUNTY COORDINATE SYSTEM (WCCS), OZAUKEE COUNTY, NORTH AMERICAN DATUM OF 1983, 2011 ADJUSTMENT (NAD83(2011)). NORTH AMERICAN VERTICAL DATUM OF 1988 (NAVD88(2012)), USING THE WISCONSIN CONTINUALLY OPERATING REFERENCE STATIONS (WISCORS).
4. CONTRACTOR SHALL VERIFY LOCATION OF WORK AND REPORT ANY DISCREPANCIES TO THE ENGINEER PRIOR TO COMMENCING WORK.

GRADING NOTES

1. RIM ELEVATIONS IN CURB AND GUTTER ARE FLANGE GRADES.
2. RIM ELEVATION WITHIN PAVEMENTS AND LANDSCAPING ARE AT CENTER OF STRUCTURE.
3. INTEGRAL CONCRETE CURB HEAD WILL VARY IN HEIGHT. INTEGRAL CONCRETE CURB SHALL BE FLUSH ON NORTH SIDE OF PATIO AND TAPER ON THE EAST AND WEST SIDES FROM NORTH TO SOUTH.

eu:a
eppstein uhen : architects
milwaukee 333 East Chicago Street Milwaukee, Wisconsin 53202 telephone 414.271.5350
madison 309 West Johnson Street, Suite 202 Madison, Wisconsin 53703 telephone 608.442.5350

GRAEF
One Honey Creek Corporate Center
125 South 84th Street, Suite 401
Milwaukee, WI 53214-1469
414 / 259 1500
414 / 259 0037 fax
www.graef-usa.com

PROJECT INFORMATION

MEQUON APARTMENTS

11130 BUNTROCK AVE
MEQUON, WI 53092

ISSUANCE AND REVISIONS

Bid Package
Bid Package Description

#	DATE	DESCRIPTION
1	12/13/2016	ADDENDUM NO. 1
2	TBD	ADDENDUM NO. 2

SHEET INFORMATION

PROGRESS DOCUMENTS NOT FOR CONSTRUCTION

These documents reflect progress and intent and may be subject to change, including additional detail. These are not final construction documents and should not be used for final bidding or construction-related purposes.

PROJECT MANAGER	JTM
PROJECT NUMBER	116319-01
DATE	11-07-2016

SITE GRADING PLAN

C400

© Eppstein Uhen Architects, Inc.

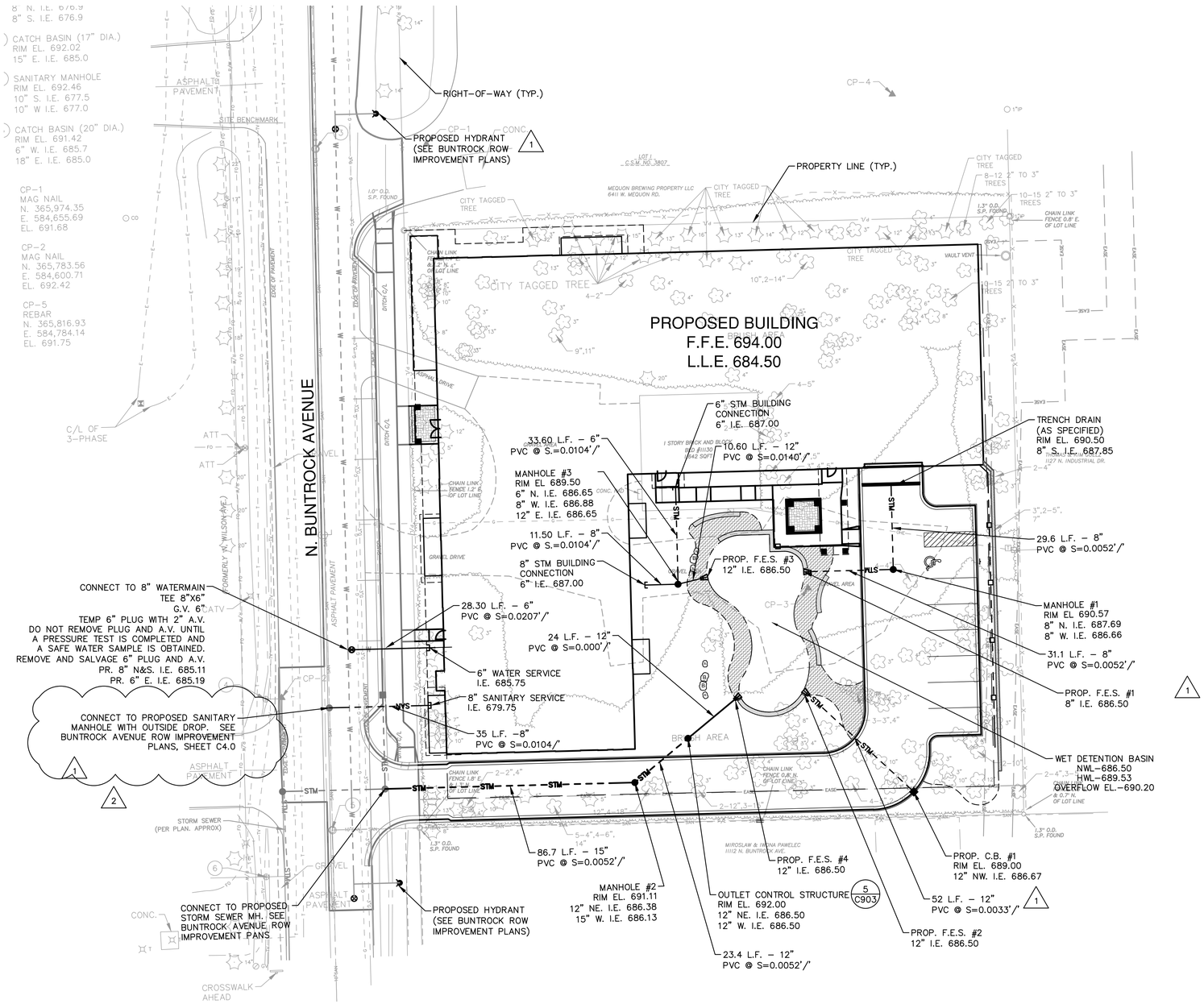

LEGEND

—STM— — — — —	–PROPOSED STORM SEWER (2 / C902)
—SAN— — — — —	–PROPOSED SANITARY SEWER (2 / C902)
— W — — — — —	–PROPOSED WATER MAIN (1 / C902)
●	–PROPOSED MANHOLE (5 / C902)
■	–PROPOSED CATCH BASIN (4 / C902)
	–PROPOSED FLARED END SECTION (FES) (6 / C902)
⊗	–PROPOSED GATE VALVE
	–PROPOSED HYDRANT
	–PROPOSED UTILITY PLUG

GENERAL NOTES

1. THE BASE SURVEY IS A COMPOSITE OF SURVEYS PREPARED BY NORTH SHORE ENGINEERING, INC. IN AUGUST, 2015 AND GRAEF IN NOVEMBER, 2015. ALL UNDERGROUND UTILITIES AND STRUCTURES HAVE BEEN SHOWN TO A REASONABLE DEGREE OF ACCURACY AND IT SHALL BE THE CONTRACTOR'S RESPONSIBILITY TO VERIFY THEIR EXACT LOCATION AND TO AVOID DAMAGE THERETO.
2. TREE SURVEY WAS PREPARED BY GRAEF, IN NOVEMBER, 2015. TREE SURVEY HAS BEEN MODIFIED DUE TO ADDITIONAL INFORMATION FROM THE CITY OF MEQUON. 2 1
3. COORDINATES ARE BASED THE WISCONSIN COUNTY COORDINATE SYSTEM (WCCS), OZAUKEE COUNTY, NORTH AMERICAN DATUM OF 1983, 2011 ADJUSTMENT (NAD83(2011)). NORTH AMERICAN VERTICAL DATUM OF 1988 (NAVD88(2012)), USING THE WISCONSIN CONTINUALLY OPERATING REFERENCE STATIONS (WISCORS).
4. CONTRACTOR SHALL VERIFY LOCATION OF WORK AND REPORT ANY DISCREPANCIES TO THE ENGINEER PRIOR TO COMMENCING WORK.

UTILITY NOTES

1. CONTRACTOR SHALL VERIFY ELEVATION OF EXISTING INVERTS PRIOR TO INSTALLATION OF PROPOSED UTILITIES.
2. BUILDING LATERALS SHALL BE CONSTRUCTED IN ACCORDANCE WITH LOCAL AND STATE PLUMBING CODES. SITE UTILITY CONTRACTOR SHALL STUB LATERAL TO 5 FEET OUTSIDE BUILDING. SEE INTERIOR PLUMBING PLANS FOR CONTINUATION OF PIPING INTO BUILDING BY BUILDING PLUMBING CONTRACTOR IN ACCORDANCE WITH STANDARD SPECIFICATIONS FOR SEWER AND WATER CONSTRUCTION IN WISCONSIN, LATEST EDITION.
3. CONTRACTOR SHALL CENTER ONE FULL LENGTH OF PIPE ON SEWER AT WATER MAIN CROSSINGS, SUCH THAT JOINTS WILL BE AS FAR FROM SEWER AS POSSIBLE.
4. GENERAL CONTRACTOR SHALL COORDINATE WITH LOCAL GAS, TELEPHONE, AND ELECTRICAL UTILITIES FOR EXACT LOCATION, SIZE AND DEPTH OF EXISTING OR NEW SERVICE.
5. RIM ELEVATIONS IN CURB AND GUTTER ARE FLANGE GRADES.
6. RIM ELEVATIONS WITHIN PAVEMENT AND LANDSCAPING ARE AT CENTER OF STRUCTURE.
7. PROPOSED CATCH BASIN IS SHOWN AT FACE OF CURB. CONTRACTOR SHALL BE RESPONSIBLE FOR POSITIONING PROPOSED CATCH BASIN WITHIN CURB AND GUTTER.
8. PIPE LENGTHS AND INVERTS ARE TO CENTER OF STRUCTURES.
9. MANHOLE #1 SHALL HAVE TIDEFLEX BACKFLOW PREVENTER (SEE SPECIFICATIONS) INSTALLED ON THE OUTGOING PIPE.
10. CONTRACTOR SHALL SUBMIT SHOP DRAWINGS FOR PROPOSED FLARED END SECTIONS. ALL FLARED END SECTIONS SHALL BE ALUMINUM MATERIAL.

eu:a
eppstein uhen : architects
milwaukee 333 East Chicago Street Milwaukee, Wisconsin 53202 telephone 414.271.5350
madison 309 West Johnson Street, Suite 202 Madison, Wisconsin 53703 telephone 608.442.5350

GRAEF
One Honey Creek Corporate Center
125 South 84th Street, Suite 401
Milwaukee, WI 53214-1469
414 / 259 1500
414 / 259 0037 fax
www.graef-usa.com

PROJECT INFORMATION

MEQUON APARTMENTS

11130 BUNTROCK AVE
MEQUON, WI 53092

ISSUANCE AND REVISIONS

Bid Package
Bid Package Description

#	DATE	DESCRIPTION
1	12/13/2016	ADDENDUM NO. 1
2	TBD	ADDENDUM NO. 2

SHEET INFORMATION

PROGRESS DOCUMENTS NOT FOR CONSTRUCTION

These documents reflect progress and intent and may be subject to change, including additional detail. These are not final construction documents and should not be used for final bidding or construction-related purposes.

PROJECT MANAGER	JTM
PROJECT NUMBER	116319-01
DATE	11-07-2016

SITE UTILITY PLAN

C500

© Eppstein Uhen Architects, Inc.

Attachment: Packet [2090 : Dermond Property Investments]

Packet Pg. 151

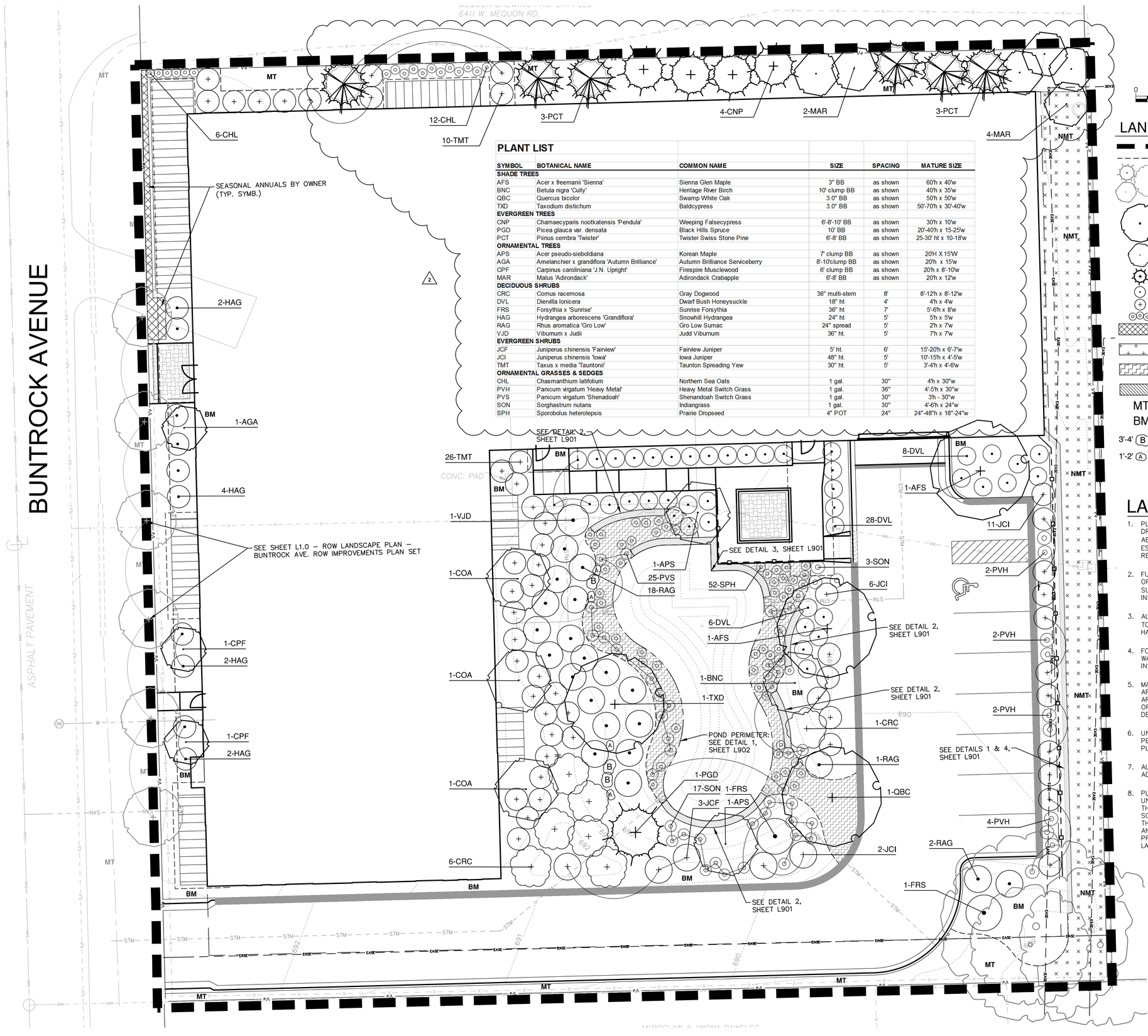

PLANT LIST

SYMBOL	BOTANICAL NAME	COMMON NAME	SIZE	SPACING	MATURE SIZE
SHADE TREES					
AFS	Acer x freemanii 'Sienna'	Sienna Glen Maple	3" BB	as shown	60'h x 40'w
BNC	Betula nigra 'Cully'	Heritage River Birch	10' clump BB	as shown	40'h x 35'w
QBC	Quercus bicolor	Swamp White Oak	3.0" BB	as shown	50'h x 50'w
TXD	Taxodium distichum	Baldcypress	3.0" BB	as shown	50'-70'h x 30'-40'w
EVERGREEN TREES					
CNP	Chamaecyparis nootkatensis 'Pendula'	Weeping Falsecypress	6'-8'-10' BB	as shown	30'h x 10'w
PGD	Picea glauca var. densata	Black Hills Spruce	10' BB	as shown	20'-40'h x 15-25'w
PCT	Piinus cembra 'Twister'	Twister Swiss Stone Pine	6'-8' BB	as shown	25-30' ht x 10-18'w
ORNAMENTAL TREES					
APS	Acer pseudo-sieboldiana	Korean Maple	7' clump BB	as shown	20'H X 15'W
AGA	Amelanchier x grandiflora 'Autumn Brilliance'	Autumn Brilliance Serviceberry	8'-10'clump BB	as shown	20'h x 15'w
CPF	Carpinus caroliniana 'J.N. Upright'	Firespire Musclewood	6' clump BB	as shown	20'h x 8'-10'w
MAR	Malus 'Adirondack'	Adirondack Crabapple	6'-8' BB	as shown	20'h x 12'w
DECIDUOUS SHRUBS					
CRC	Cornus racemosa	Gray Dogwood	36" multi-stem	8'	8'-12'h x 8'-12'w
DVL	Diervilla lonicera	Dwarf Bush Honeysuckle	18" ht	4'	4'h x 4'w
FRS	Forsythia x 'Sunrise'	Sunrise Forsythia	36" ht	7'	5'-6'h x 8'w
HAG	Hydrangea arborescens 'Grandiflora'	Snowhill Hydrangea	24" ht	5'	5'h x 5'w
RAG	Rhus aromatica 'Gro Low'	Gro Low Sumac	24" spread	5'	2'h x 7'w
VJD	Viburnum x Judii	Judd Viburnum	36" ht.	5'	7'h x 7'w
EVERGREEN SHRUBS					
JCF	Juniperus chinensis 'Fairview'	Fairview Juniper	5' ht.	6'	15'-20'h x 6'-7'w
JCI	Juniperus chinensis 'Iowa'	Iowa Juniper	48" ht.	5'	10'-15'h x 4'-5'w
TMT	Taxus x media 'Tauntonii'	Taunton Spreading Yew	30" ht.	5'	3'-4'h x 4'-6'w
ORNAMENTAL GRASSES & SEDGES					
CHL	Chasmanthium latifolium	Northern Sea Oats	1 gal.	30"	4'h x 30"w
PVH	Panicum virgatum 'Heavy Metal'	Heavy Metal Switch Grass	1 gal.	36"	4'-5'h x 30"w
PVS	Panicum virgatum 'Shenadoah'	Shenandoah Switch Grass	1 gal.	30"	3'h - 30"w
SON	Sorghastrum nutans	Indiangrass	1 gal.	30"	4'-6'h x 24"w
SPH	Sporobolus heterolepsis	Prairie Dropseed	4" POT	24"	24"-48"h x 18"-24"w

0 5' 10' 20'
SCALE: 1" = 10'

LANDSCAPE LEGEND

- LIMIT OF LANDSCAPE CONSTRUCTION
- PROPOSED ALUMINUM EDGER
- EXISTING TREES TO BE PRESERVED - SEE SHEET C200
- SHADE TREE
- ORNAMENTAL TREE
- EVERGREEN TREE
- DECIDUOUS SHRUB
- EVERGREEN SHRUB
- ORNAMENTAL GRASS
- ANNUALS BY OWNER
- NMT - NO MOW TURF
- DECORATIVE STONE
- STONE RETAINING WALLS
- MT MANICURED TURF - SOD
- BM SHREDDED BARK MULCH
- 3'-4' (B) / 1'-2' (A) INDIVIDUAL SEGMENTAL OUTCROPPING RETAINING WALL UNITS

LANDSCAPING NOTES:

1. PLANT NAMES MAY BE ABBREVIATED ON THE DRAWINGS. SEE PLANT LIST FOR SYMBOLS, ABBREVIATIONS, BOTANICAL/COMMON NAMES, SIZES, ESTIMATED QUANTITIES (IF GIVEN) AND OTHER REMARKS.
2. FURNISH ALL PLANT MATERIALS FREE OF PESTS OR PLANT DISEASES. ALL PLANTS SHALL BE SUBJECT TO OWNER'S ACCEPTANCE PRIOR TO INSTALLATION.
3. ALL PLANT BEDS AND TREE PLANTING PITS ARE TO RECEIVE 3" DEEP LAYER OF SHREDDED HARDWOOD BARK MULCH.
4. FORM 72–INCH, OR AS OTHERWISE INDICATED, WATERING BASIN AROUND ALL TREES NOT INSTALLED IN PAVED AREAS.
5. MAINTAIN 72–INCH DIAMETER MINIMUM CLEAR SOIL AREA AROUND ALL TREES IN MANICURED TURF AREAS. MULCH TREE RING WITH SPECIFIED DEPTH OF HARDWOOD BARK MULCH. SEE PLANTING DETAILS.
6. UNLESS OTHERWISE INDICATED: ALL SHRUBS, PERENNIALS AND ORNAMENTAL GRASSES SHALL BE PLACED IN STRAIGHT ROWS, EQUALLY SPACED
7. ALL PLANTING BEDS ARE TO BE SEPARATED FROM ADJACENT TURF AREAS WITH ALUMINUM EDGING.
8. PLANT SUBSTITUTIONS WILL NOT BE PERMITTED UNLESS IT CAN BE VERIFIED UNEQUIVOCALLY THAT THE PLANTS ARE NOT AVAILABLE FROM NURSERY SOURCES LOCATED A REASONABLE DISTANCE FROM THE PROJECT SITE. IF THIS SHOULD HAPPEN, ANY PROPOSED PLANT SUBSTITUTION WILL REQUIRE PRIOR REVIEW AND ACCEPTANCE BY THE PROJECT LANDSCAPE ARCHITECT.

eu:a
eppstein uhen : architects
milwaukee 333 East Chicago Street Milwaukee, Wisconsin 53202 telephone 414.271.5350
madison 309 West Johnson Street, Suite 202 Madison, Wisconsin 53703 telephone 608.442.5350

GRAEF
One Honey Creek Corporate Center
125 South 84th Street, Suite 401
Milwaukee, WI 53214-1469
414 / 259 1500
414 / 259 0037 fax
www.graef-usa.com

PROJECT INFORMATION

MEQUON APARTMENTS

11130 BUNTROCK AVE
MEQUON, WI 53092

ISSUANCE AND REVISIONS

Bid Package
Bid Package Description

#	DATE	DESCRIPTION
1	12/13/2016	ADDENDUM NO. 1
2	TBD	ADDENDUM NO. 2

SHEET INFORMATION

PROGRESS DOCUMENTS NOT FOR CONSTRUCTION

These documents reflect progress and intent and may be subject to change, including additional detail. These are not final construction documents and should not be used for final bidding or construction-related purposes.

PROJECT MANAGER	JTM
PROJECT NUMBER	116319-01
DATE	11-07-2016

SITE LANDSCAPE PLAN

L100

© Eppstein Uhen Architects, Inc.

Attachment: Packet (2090 : Dermond Property Investments)

Attachment: Packet (2090 : Dermond Property Investments)

PERSPECTIVE - NORTHWEST CORNER

PERSPECTIVES

A08

11130 BUNTROCK AVE

DATE: 11/09/2015
PROJECT #: 15-136

KINDNESS architecture+

DERMOND PROPERTY INVESTMENTS

Attachment: Packet (2090 : Dermond Property Investments)